CS1W-LC001
Loop Control Unit
Version 2.5
OPERATION MANUAL

Revised August 2001

Notice:

OMRON products are manufactured for use according to proper procedures by a qualified operator and only for the purposes described in this manual.
The following conventions are used to indicate and classify precautions in this manual. Always heed the information provided with them. Failure to heed precautions can result in injury to people or damage to property.

⚠DANGER Indicates an imminently hazardous situation which, if not avoided, will result in death or serious injury.

⚠WARNING Indicates an imminently hazardous situation which, if not avoided, could result in death or serious injury.

⚠Caution Indicates an imminently hazardous situation which, if not avoided, may result in minor or moderate injury, or property damage.

OMRON Product References

All OMRON products are capitalized in this manual. The work "Unit" is also capitalized when it refers to an OMRON product, regardless of whether or not it appears in the proper name of the product.
The abbreviation "Ch" which appears in some displays and on some ONROM products, often means "word" and is abbreviated "Wd" in documentation in this sense.
The abbreviation "PC" means Programmable Controller and is not used as an abbreviation for anything else.

Visual Aids

The following headings appear in the left column of the manual to help you locate different types of information.

Note Indicates information of particular interest for efficient and convenient operation of the product.

1, 2, 3... 1. Indicates lists of one sort or another, such as procedures, checklists, etc.

© OMRON, 2000

All rights reserved. No part of this publication may be reproduced, stored in a retrieval system, or transmitted, in any form, or by any means, mechanical, electronic, photocopying, recording, or otherwise, without the prior written permission of OMRON.

No patent liability is assumed with respect to the use of the information contained herein. Moreover, because OMRON is constantly striving to improve its high-quality products, the information contained in this manual is subject to change without notice. Every precaution has been taken in the preparation of this manual. Nevertheless, OMRON assumes no responsibility for errors or omissions. Neither is any liability assumed for damages resulting from the user of the information contained in this publication.

TABLE OF CONTENTS

PRECAUTIONS xviii

1 Intended Audience xix
2 General Precautions xix
3 Safety Precautions xix
4 Operating Environment Precautions xxi
5 Application Precautions xxi
6 EC Directives xxiv
7 Other Applicable Directives xxiv

SECTION 1
SPECIFICATIONS 1

1-1 Outline 2
1-2 Configuration of Instrumentation System 26
1-3 Specifications 37
1-4 How to Use Function Blocks for Specific Operations 48
1-5 Basic Procedure for Using the Loop Control Unit 52

SECTION 2
COMPONENTS, INSTALLATION AND WIRING 59

2-1 Names and Functions of Parts 60
2-2 Installation 64
2-3 Connecting to CX-Process Tool and CX-Process Monitor 66

SECTION 3
MECHANISM OF THE LOOP CONTROL UNIT 69

3-1 Configuration of Function Blocks 70
3-2 Description of Operation 84
3-3 Exchanging Data with the CPU Unit 114
3-4 Exchanging Data with CX-Process Monitor/SCADA Software and with Other Nodes 122
3-5 Fail-safe Countermeasure Guidelines 135

SECTION 4
SIMPLE EXAMPLE OF USE 139

4-1 Simple Example of Use 140

TABLE OF CONTENTS

SECTION 5
EXAMPLES OF FUNCTION BLOCK COMBINATIONS 151

5-1 Basic Examples of PID Control 152
5-2 Examples of Applied Control Types 161

SECTION 6
HOW TO USE FINS COMMANDS 173

6-1 How to Use FINS Commands 174
6-2 FINS Command List 177
6-3 Description of FINS Commands 178

SECTION 7
SERRORS AND ALARM TROUBLESHOOTING 191

7-1 Errors and Alarm Troubleshooting 192
7-2 Maintenance 199

APPENDICES

1 How to Use the Step Ladder Program Block 205
2 How to Use the Node Terminal Blocks 217
3 List of Operation Execution Times 231

INDEX 239

REVISION HISTORY 241

About this Manual:

This manual describes the installation and operation of the CS1W-LC001 Loop Control Unit, and includes the sections described below.
The CS1W-LC001 Loop Control Unit (CS1W-LC001) helps you build an instrumentation system comprising multiple loops and is intended as a CPU Bus Unit on a PC (Programmable Controller).
Please read this manual and the other manuals related to the CS1W-LC001 Loop Control Unit carefully and be sure you understand the information provided before attempting to install and operate the Loop Control Unit.
There are four manuals used with the CS1W-LC001. These manuals are listed in the following table. The suffixes have been omitted from the catalog numbers. Be sure you are using the most recent version for your area.

Name	Contents	Cat. No. (suffixes omitted)
SYSMAC CS1 Series CS1W-LC001 Loop Control Unit Operation Manual	Describes the basic running of the Loop Control Unit (excluding detailed descriptions of the function blocks).	W374
SYSMAC CS1 Series CS1W-LC001 Loop Control Unit Function Block Reference Manual	Provides detailed information on the function blocks.	W375
SYSMAC CS1 Series CS1W-LC001 CX-Process Tool Operation Manual	Describes operation of the CX-Process Tool.	W372
SYSMAC CS1 Series CS1W-LC001 CX-Process Monitor Operation Manual	Describes operation of the CX-Process Monitor.	W373

Section 1 describes the features and system configuration of CS1W-LC001 Loop Control Units.

Section 2 describes the names and functions of parts, and provides other information required to install and operate CS1W-LC001 Loop Control Units.

Section 3 provides information on the control mechanism, basic operation, exchanging data with other Units and software, and fail-safe countermeasures for CS1W-LC001 Loop Control Units.

Section 4 describes a simple example of how to use CS1W-LC001 Loop Control Units.

Section 5 describes basic examples of PID control and examples of applied control types.

Section 6 provides information on how to use FINS commands.

Section 7 provides information on errors that may occur during running of CS1W-LC001 Loop Control Units and guidelines for troubleshooting these errors.

Appendix 1 describes how to use the Step Ladder Program block on CS1W-LC001 Loop Control Units, ***Appendix 2*** describes how to use the Node Terminal blocks on CS1W-LC001 Loop Control Units, and

Appendix 3 provides information on how to calculate the load rate, and operation execution times of each function block and the execution times of sequence commands.

⚠**WARNING**	Failure to read and understand the information provided in this manual may result in personal injury or death, damage to the product, or product failure. Please read each section in its entirety and be sure you understand the information provided in the section and related sections before attempting any of the procedures or operations given.

New Version Features: Ver. 2.0 to Ver.2.5

The following features had been added to the CS1W-LC001 Loop Control Unit in upgrading from version 2.0 to version 2.5.

- **New Function Blocks**

  The following function blocks have been added: Fuzzy Logic (Block Model 016), Range Conversion (Block Model 127), Ramped Switch (Block Model 167), Level Check (Block Model 210), Ai4 Terminal (DRT1-AD04) (Block Model 588), and Ao2Terminal (DRT1-DA02) (Block Model 589).

- **Notifying the CPU Unit of Function Block Changes**

  The CPU Unit can be informed when function blocks are downloaded by block from the CX-Process Tool software to the Loop Control Unit. (See note.)

  *1: Similar to online editing for the Loop Control Unit.

  Notification is achieved by monitoring the Function Block Change Flag (bit 15 in word n) allocated to the Loop Control Unit as a CPU Bus Unit. Changes in the status of this flag can be used to trigger required processing, such as notification that function blocks have changed.

- **Operation Specifications for Contact Type Control Target Operation Blocks when Changing from AUTO to MAN or from Site to Central Operation**

  For the ON/OFF Valve Manipulator block (Block Model 221), Motor Manipulator block (Block Model 222), Reversible Motor Manipulator block (Block Model 223), and Motor Opening Manipulator block (Block Model 224) only MAN status was switched to previously, but now the MAN input is made to agree with the AUTO input to enter MAN status.

  Also when the Site Manipulation Switch was changed from site to central for these blocks, only operation was changed to the site, but now the status is changed to MAN and the MAN input is made to agree with the answer (feedback) input to switch to maintain status at the site while allowing central operation.

- **Shorter I/O Refresh Cycle for Analog I/O Units**

  Although previously the external I/O refresh cycle for Mixed Analog I/O Units was one cycle longer for Ai/Ao Terminals, specifications have been changed so that the additional cycle is no longer required.

- **A Periodic Initialization Function Added to the Receive All Blocks block (Block Model 461)**

  ITEM 030 (periodic initialization) and ITEM 031 (initialization interval) have been added to the Receive All Blocks block (Block Model 461). These ITEMs can be used to periodically initialize function block ITEM data in the I/O memory of the CPU Unit.

- **ITEM Additions and Specification Changes for Other Blocks**

  - A Block Registration Flag (ITEM 039) and the Tool Version (ITEM 110) have been added to the System Common block (Block Model 000).
  - A Warning Limit (ITEM 012) has been added to the Basic PID block (Block Model 011, Advanced PID block (Block Model 020), 2-Position ON/OFF block (Block Model 001), 3-Position ON/OFF block (Block Model 002), Indication and Setting block (Block Model 031), Indication and Operation block (Block Model 032), Ratio Setting block (Block Model

033), Indicator block (Block Model 034), and 4-Point Warning Indicator block (Block Model 110).

- An SP Rate-of-change Limit Time Unit (ITEM 030) has been added to the Advanced PID block (Block Model 012).
- In the Batch Flowrate Capture block (Block Model 014, the following ITEMs have been added: Local SP Setting, Upper 4 Digits (ITEM 024), Remote SP Setting, Upper 4 Digits (ITEM 028), Current SP Value, Upper 4 Digits (ITEM 030), Preset Value, Upper 4 Digits (ITEM 061), and Batch Accumulated Value, Upper 4 Digits (ITEM 065) because the number of digits has been increased from 4 to 8 digits for the Local SP, Remote SP, Preset Value, and Batch Accumulated Value.
- A Time Unit (ITEM 013) was added to the Rate-of-change Limit block (Block Model 143).
- A Reference Input Disable Switch (ITEM 020) was added to the Segment Program 2 block (Block Model 157) to enable starting from the initial value rather than the reference input value even when the source of the reference input is specified.
- An Output Type (ITEM 006) was added to the Contact Distributor block (Block Model 201) to enable selecting between a constant output and a one-shot output.
- Range settings were added for individual points for the AI Terminal from CPU Unit block (Block Model 453), AO Terminal to CPU Unit block (Block Model 454), Ai4 Terminal block (Block Model 561), Pi4 Terminal block (Block Model 562), and Ai8 Terminal block (Block Model 564).
- A Receive Disable Switch (ITEM 225) was added to the Expanded DI Terminal from CPU Unit block (Block Model 455) and Expanded AI Terminal from CPU Unit block (Block Model 457) and a Send Disable Switch (ITEM 225) was added to the Expanded DO Terminal from CPU Unit block (Block Model 456) and Expanded AO Terminal from CPU Unit block (Block Model 458).
- A limit was set for writing ITEMs during execution of autotuning for Basic PID (Block Model 011) and Advanced PID (Block Model 012). (Although there was previous no limit on writing ITEMs during autotuning, ITEMs could not be written except while processing was disabled, autotuning was specified or executing, or A/M was being switched.)
- Floating point decimal data can now be specified as the source data for inputs X1 to X8. (Previously, normalized data was specified for inputs X1 to X8 and this data was scaled to floating point data. The source data was automatically detected as normalized or floating point data and scaling was disabled if the source data was already floating point data.

New Version Features: Ver. 1.5 to 2.0

The following features had been added to the CS1W-LC001 Loop Control Unit in upgrading from version 1.5 to version 2.0.

- **New Function Blocks**

  The following function blocks have been added: ES100X Controller Terminal (Block Model 045), 4-point Warning Indicator (Block Model 110), Arithmetic Operation (Block Model 126), Time Sequence Data Statistics (Block Model 153), Receive All Blocks (Block Model 461), and Send All Blocks (Block Model 462).

- **New ITEMS in Previous Function Blocks**

  - PV Error Detection MV Output Value Traceback Time has been added to 2-position ON/OFF (Block Model 001), 3-position ON/OFF (Block Model 002), Basic PID (Block Model 011), and Advanced PID (Block Model 012).
  - MV Upper Limit Output Value and MV Lower Limit Output Value have been added to Basic PID (Block Model 011), Indication and Operation (Block Model 032), and Ratio Setting (Block Model 033).
  - MV Error Contact Input and MV Error Contact Display have been added to Batch Flowrate Capture (Block Model 014), Indication and Operation (Block Model 032), and Ratio Setting (Block Model 033).
  - PV Error Contact Input and PV Error Contact Display have been added to Indication and Setting (Block Model 031), Indication and Operation (Block Model 032), Ratio Setting (Block Model 033), and Indicator (Block Model 034).
  - Inputs X1 to X8 have been added to Constant Comparator (Block Model 202).
  - Inputs X1 to X8 and Comparison Input R1 to R8 have been added to Variable Comparator (Block Model 203)
  - Contact Inputs S33 to S224 have been added to Internal Switch (Block Model 209).

- **Improved SCADA Software Support**

  Functions to monitor or set Loop Control Unit data from standard SCADA software have been improved. Two new function blocks, Receive All Blocks (Block Model 462) and Send all Blocks (Block Model 461) can be used to access Control Block (e.g., Basic PID), Operation Block, and External Controller Block data in the I/O memory of the CPU Unit using CSV tags created from the CX-Process Tool software.

- **Flash Memory**

  Data Transfer between RAM and Flash Memory

  The CX-Process Tool can be used to transfer function block data from RAM in the Loop Control Unit to flash memory in the Loop Control Unit.

  Data Transfer from Flash to RAM at Startup (Battery-free Operation)

  Turn ON pin 2 of the DIP switch on the front of the Loop Controller Unit will cause the contents of flash memory to be transferred to RAM in the Loop Controller Unit each time the Unit is started. This enables operation without worrying about the backup battery.

- **RS-232C Communications**

  A new ES100X Controller Terminal Block enables connecting an OMRON ES100X Controller to the RS-232C port on the Loop Control

Unit to monitor or set the ES100X via RS-232C communications or RS-485 communications via RS-232C.

Restrictions in Use of Function Blocks According to Version

- The following function blocks described in this manual can be used only when Loop Control Unit CS1W-LC001 Ver.1.20 and onwards and CX-Process Tool Ver.1.20 and onwards are used:
  - The following function blocks can be registered on CX-Process Tool when Loop Control Unit Ver.1.0□ and CX-Process Tool Ver1.20 or onwards are used. However, if the data of these function blocks is downloaded to the Loop Control Unit in major item units (units of Loop Control Unit) when these function blocks are registered on CX-Process Tool, an error occurs, and the download is canceled. (Other function blocks also are not downloaded.)
  - The following function blocks cannot be registered on CX-Process Tool when Loop Control Unit Ver.1.20 and onwards and CX-Process Tool Ver.1.00 are used. For this reason, these function blocks cannot also be downloaded to the Loop Control Unit.

    If the following function blocks already exist on the Loop Control Unit and are uploaded to CX-Process Tool, only the following function blocks are not uploaded. (When a new upload is performed, these blocks become empty.)

2-position ON/OFF (Block Model 001), 3-position ON/OFF (Block Model 002), Blended PID (Block Model 013), 3-input Selector (Block Model 163), 3-output Selector (Block Model 164), Batch Data Collector (Block Model 174), DI Terminal from Expanded CPU Unit (Block Model 455), DO Terminal from Expanded CPU Unit (Block Model 456), AI Terminal from Expanded CPU Unit (Block Model 457), AO Terminal from Expanded CPU Unit (Block Model 458)

Note The version of the Loop Control Unit can be verified in the Monitor run status screen ([Execute]-[Run]-[Monitor run status]) on CX-Process Tool.

When the above function blocks are used, check in the Check System Operation screen on CX-Process Tool beforehand that the content of ITEM 099 onwards in the System Common block (Block Model 000) is as follows.

ITEM	Data name	Data
099	MPU/FROM version indication	V1.20V1.20

Version V1.20 and onwards must be indicated.

- The following function blocks described in this manual can be used only when Loop Control Unit CS1W-LC001 Ver.1.50 and onwards and CX-Process Tool Ver.1.50 and onwards are used:
  - The following function blocks can be registered on CX-Process Tool when versions of Loop Control Unit earlier than Ver.1.50 (Ver.1.0□ or Ver.1.20) and CX-Process Tool Ver1.50 or onwards are used. However, if the data of these function blocks is downloaded to the Loop Control Unit in major item units (units of Loop Control Unit) when these function blocks are registered on CX-Process Tool, an error occurs, and only those function blocks are not downloaded. (Other function blocks are downloaded successfully.)
  - The following function blocks cannot be registered on CX-Process Tool when Loop Control Unit Ver.1.50 and onwards and versions of CX-

Process Tool earlier than Ver.1.50 (Ver.1.00 or Ver. 1.20) are used. For this reason, these function blocks cannot also be downloaded to the Loop Control Unit.

If the following function blocks already exist on the Loop Control Unit and are uploaded to CX-Process Tool, only the following function blocks are not uploaded. (When a new upload is performed, these blocks become empty.)

Segment Program (Block Model 157), Accumulated Value Input Adder (Block Model 182), Accumulated Value Input Multiplier (Block Model 183), Constant Comparator (Block Model 202), Variable Comparator (Block Model 203), Clock Pulse (Block Model 207), ON/OFF Valve Manipulator (Block Model 221), Motor Manipulator (Block Model 222), Reversible Motor Manipulator (Block Model 223), Motor Opening Manipulator (Block Model 224)

Likewise, the following functions can be used only when Loop Control Unit CS1W-LC001 Ver.1.50 and onwards and CX-Process Tool Ver.1.50 and onwards are used:

- The following ITEMs can be set on CX-Process Tool when versions of Loop Control Unit earlier than Ver.1.50 (Ver.1.0□ or Ver.1.20) and CX-Process Tool Ver1.50 or onwards are used. However, if the data of these ITEMs is downloaded to the Loop Control Unit when these ITEMs are set on CX-Process Tool, only those ITEMs are not downloaded. (Other ITEMs are downloaded successfully.)

  The following ITEMs cannot be set on CX-Process Tool when Loop Control Unit Ver.1.50 or onwards and versions of CX-Process Tool earlier than Ver.1.50 (Ver.1.00 or Ver. 1.20) are used. For this reason, these ITEMs cannot also be downloaded to the Loop Control Unit.

  If a download in major item units (units of Loop Control Unit) or a download in function blocks units including initial setting data is performed, the respective defaults are set to the following ITEMs on the Loop Control Unit.

  If the following ITEMs are already set on the Loop Control Unit and are uploaded to the CX-Process Tool, only the following ITEMs are not uploaded.

AT (auto-tuning) functions of Basic PID block (Block Model 011) and Advanced PID (Block Model 012), and wait function and additional steps (step numbers 8 to 15) of the Ramp Program block (Block Model 155)

Note 1 For details on which actual ITEM this restriction applies to, refer to the ITEM list for the relevant function block in the *Function Block Reference Manual*.

Note 2 The version of the Loop Control Unit can be verified in the Monitor run status screen ([Execute]-[Run]-[Monitor run status]) on CX-Process Tool.

When the above function blocks are used, check in the Check System Operation screen on CX-Process Tool beforehand that the content of ITEM 099 onwards in the System Common block (Block Model 000) is as follows.

ITEM	Data name	Data
099	MPU/FROM version indication	V1.50V1.50

Version V1.50 and onwards must be indicated.

- The following function blocks described in this manual can be used only when Loop Control Unit CS1W-LC001 Ver. 2.00 and onwards and CX-Process Tool Ver. 2.00 and onwards are used:
  - The following function blocks can be registered on CX-Process Tool when versions of Loop Control Unit earlier than Ver. 2.00 (Ver. 1.0□, Ver. 1.20, or Ver. 1.50) and CX-Process Tool Ver 1.50 or onwards are used. However, if the data of these function blocks is downloaded to the Loop Control Unit in major item units (units of Loop Control Unit) when these function blocks are registered on CX-Process Tool, an error occurs, and only those function blocks are not downloaded. (Other function blocks are downloaded successfully.)
  - The following function blocks cannot be registered on CX-Process Tool when Loop Control Unit Ver. 2.00 and onwards and versions of CX-Process Tool earlier than Ver. 2.00 (Ver. 1.00 Ver. 1.20, or Ver. 1.50) are used. For this reason, these function blocks cannot also be downloaded to the Loop Control Unit.

    If the following function blocks already exist on the Loop Control Unit and are uploaded to CX-Process Tool, only the following function blocks are not uploaded. (When a new upload is performed, these blocks become empty.)

ES100X Controller Terminal (Block Model 045), 4-point Warning Indicator (Block Model 110), Arithmetic Operation (Block Model 126), Time Sequence Data Statistics (Block Model 153), Receive All Blocks (Block Model 461), Send All Blocks (Block Model 462)

Likewise, the following functions can be used only when Loop Control Unit CS1W-LC001 Ver. 2.00 and onwards and CX-Process Tool Ver. 2.00 and onwards are used:

- The following ITEMs can be set on CX-Process Tool when versions of Loop Control Unit earlier than Ver. 2.00 (Ver. 1.00 Ver. 1.20, or Ver. 1.50) and CX-Process Tool Ver, 2.00 or onwards are used. However, if the data of these ITEMs is downloaded to the Loop Control Unit when these ITEMs are set on CX-Process Tool, only those ITEMs are not downloaded. (Other ITEMs are downloaded successfully.)
- The following ITEMs cannot be set on CX-Process Tool when Loop Control Unit Ver. 2.0 or onwards and versions of CX-Process Tool earlier than Ver. 2.00 (Ver. 1.00 Ver. 1.20, or Ver. 1.50) are used. For this reason, these ITEMs cannot also be downloaded to the Loop Control Unit.

  If a download in major item units (units of Loop Control Unit) or a download in function blocks units including initial setting data is performed, the respective defaults are set to the following ITEMs on the Loop Control Unit.

  If the following ITEMs are already set on the Loop Control Unit and are uploaded to the CX-Process Tool, only the following ITEMs are not uploaded.

MV Output Retrace Time for PV Error has been added to 2-position ON/OFF (Block Model 001), 3-position ON/OFF (Block Model 002), Basic PID (Block Model 011), and Advanced PID (Block Model 012).

High MV Limit Output and Low MV Limit Output have been added to Basic PID (Block Model 011), Indication and Operation (Block Model 032), and Ratio Setting (Block Model 033).

MV Error Input and MV Error Display have been added to Batch Flowrate Capture (Block Model 014), Indication and Operation (Block Model 032), and Ratio Setting (Block Model 033).

PV Error Input and PV Error Display have been added to Indication and Setting (Block Model 031), Indication and Operation (Block Model 032), Ratio Setting (Block Model 033), and Indicator (Block Model 034).

Inputs X1 to X8 have been added to Constant Comparator (Block Model 202).

Inputs X1 to X8 and Comparison Input R1 to R8 have been added to Variable Comparator (Block Model 203)

Contact Inputs S33 to S224 have been added to Internal Switch (Block Model 209).

Note 1 For details on which actual ITEM this restriction applies to, refer to the ITEM list for the relevant function block in the *Function Block Reference Manual*.

Note 2 The version of the Loop Control Unit can be verified in the Monitor run status screen ([Execute]-[Run]-[Monitor run status]) on CX-Process Tool.

When the above function blocks are used, check in the Check System Operation screen on CX-Process Tool beforehand that the content of ITEM 099 onwards in the System Common block (Block Model 000) is as follows.

ITEM	Data name	Data
099	MPU/FROM version indication	V2.00V2.00

Version V2.00 and onwards must be indicated.

- The following function blocks described in this manual can be used only when Loop Control Unit CS1W-LC001 Ver.2.50 and onwards and CX-Process Tool Ver.2.50 and onwards are used:
  - The following function blocks can be registered on CX-Process Tool when the Loop Control Unit is pre-Ver.2.50 and the CX-Process Tool is Ver 2.50 or later. However, if the data of these function blocks is downloaded to the Loop Control Unit in major item units (units of Loop Control Unit) when these function blocks are registered on CX-Process Tool, an error occurs, and the download is canceled. (Other function blocks will be downloaded normally.)
  - The following function blocks cannot be registered on CX-Process Tool when the Loop Control Unit is Ver. 2.50 or later and CX-Process Tool is pre-Ver.2.50. For this reason, these function blocks cannot also be downloaded to the Loop Control Unit.

    If the following function blocks already exist on the Loop Control Unit and are uploaded to CX-Process Tool, only the following function blocks are not uploaded. (When a new upload is performed, these blocks become empty.)

Fuzzy Logic (Block Model 016), Range Conversion (Block Model 127), Level Check (Block Model 210), Ai4 Terminal (DRT1-AD04) (Block Model 588), Ao2 Terminal (DRT1-DA02) (Block Model 589)

Likewise, the following functions can be used only when Loop Control Unit CS1W-LC001 Ver. 2.50 or onwards and CX-Process Tool Ver. 2.50 or onwards are used:

- The following ITEMs can be set on CX-Process Tool when versions of Loop Control Unit earlier than Ver. 2.50 and CX-Process Tool Ver. 2.50 or onwards are used. However, if the data of these ITEMs is downloaded to the Loop Control Unit when these ITEMs are set on CX-Process Tool, only those ITEMs are not downloaded. (Other ITEMs are downloaded successfully.)
- The following ITEMs cannot be set on CX-Process Tool when Loop Control Unit Ver. 2.50 or onwards and versions of CX-Process Tool earlier than Ver. 2.50 are used. For this reason, these ITEMs cannot also be downloaded to the Loop Control Unit.

  If a download in major item units (units of Loop Control Unit) or a download in function blocks units including initial setting data is performed, the respective defaults are set to the following ITEMs on the Loop Control Unit.

  If the following ITEMs are already set on the Loop Control Unit and are uploaded to the CX-Process Tool, only the following ITEMs are not uploaded.

Block Registration Flag (ITEM 039) and Tool Version (ITEM 110) in System Common (Block Model 000).

Warning Limit (ITEM 012) in Basic PID (Block Model 011, Advanced PID (Block Model 020), 2-Position ON/OFF (Block Model 001), 3-Position ON/OFF (Block Model 002), Indication and Setting (Block Model 031), Indication and Operation (Block Model 032), Ratio Setting (Block Model 033), Indicator (Block Model 034), and 4-Point Warning Indicator (Block Model 110).

SP Rate-of-change Limit Time Unit (ITEM 030) in Advanced PID (Block Model 012).

Local SP Setting, Upper 4 Digits (ITEM 024), Remote SP Setting, Upper 4 Digits (ITEM 028), Current SP Value, Upper 4 Digits (ITEM 030), Preset Value, Upper 4 Digits (ITEM 061), and Batch Accumulated Value, Upper 4 Digits (ITEM 065) in Batch Flowrate (Block Model 014).

Time Unit (ITEM 013) in Rate-of-change Limit (Block Model 143).

Reference Input Disable Switch (ITEM 020) in Segment Program 2 (Block Model 157).

Output Type (ITEM 006) in Contact Distributor (Block Model 201).

Range settings in AI Terminal from CPU Unit (Block Model 453), AO Terminal to CPU Unit (Block Model 454), Ai4 Terminal (Block Model 561), Pi4 Terminal (Block Model 562), and Ai8 Terminal (Block Model 564).

Receive Disable Switch (ITEM 225) in Expanded DI Terminal from CPU Unit (Block Model 455) and Expanded AI Terminal from CPU Unit (Block Model 457) and Send Disable Switch (ITEM 225) in Expanded DO Terminal from CPU Unit (Block Model 456) and Expanded AO Terminal from CPU Unit (Block Model 458).

Note 1 For details on which actual ITEM this restriction applies to, refer to the ITEM list for the relevant function block in the *Function Block Reference Manual*.

Note 2 The version of the Loop Control Unit can be verified in the Monitor run status screen ([Execute]-[Run]-[Monitor run status]) on CX-Process Tool.

When the above function blocks are used, check in the Check System Operation screen on CX-Process Tool beforehand that the content of ITEM 099 onwards in the System Common block (Block Model 000) is as follows:

ITEM	Data name	Data
099	MPU/FROM version indication	V2.50V2.50

Version V2.50 and onwards must be indicated.

PRECAUTIONS

This section provides general precautions for using the Programmable Controller (PC) and related devices.

The information contained in this section is important for the safe and reliable application of the Programmable Controller. You must read this section and understand the information contained before attempting to set up or operate a PC system.

1 Intended Audience xix
2 General Precautions xix
3 Safety Precautions xix
4 Operating Environment Precautions xxi
5 Application Precautions xxi
6 EC Directives xxiv
7 Other Applicable Directives xxiv

1 Intended Audience

This manual is intended for the following personnel, who must also have knowledge of electrical systems (an electrical engineer or the equivalent) and knowledge about instrumentation system.

- Personnel in charge of installing FA systems
- Personnel in charge of designing FA systems
- Personnel in charge of managing FA systems and facilities

2 General Precautions

The user must operate the product according tot he performance specifications described in the operation manuals.

Before using the product under conditions which are not described in this manual or applying the product to nuclear control systems, railroad systems, aviation systems, vehicles, combustion systems, medical equipment, amusement machines, safety equipment, petrochemical plants, and other systems, machines, and equipment that may have a serious influence on lives and property if used improperly, consult your OMRON representative.

Make sure that the ratings and performance characteristics of the product are sufficient for the systems, machines, and equipment, and be sure to provide the system, machines and equipment with double safety mechanism.

This manual provides information for running OMRON Loop Control Units. Be sure to read this manual before attempting to use the Loop Control Units and related software (CX-Process Tool and CX-Process Monitor) and keep this manual close at hand for reference during running.

⚠WARNING It is extremely important that a PC and all PC Units be used for the specified purpose and under the specified conditions, especially in applications that directly or indirectly affect human life. You must consult with your OMRON representative before applying a PC System to the above-mentioned applications.

3 Safety Precautions

⚠WARNING Do not attempt to take any Unit apart while power is being supplied. Doing so may result in electric shock.

⚠WARNING Provide safety measures in external circuits (i.e., not in the Programmable Controller), including the following items, to ensure safety in the system if an abnormality occurs due to malfunction of the PC or another external factor affecting the PC operation. Not doing so may result in serious accidents.

- Emergency stop circuits, interlock circuits, limit circuits, and similar safety measures must be provided in external control circuits.
- The PC will turn OFF all outputs when its self-diagnosis function detects any error or when a severe failure alarm (FALS) instruction is executed. As a countermeasure for such errors, external safety measures must be provided to ensure safety in the system.

- The PC outputs may remain ON or OFF due to deposition or burning of the output relays or destruction of the output transistors. As a countermeasure for such problems, external safety measures must be provided to ensure safety in the system.
- When the 24-VDC output (service power supply to the PC) is overloaded or short-circuited, the voltage may drop and result in the outputs being turned OFF. As a countermeasure for such problems, external safety measures must be provided to ensure safety in the system.

⚠WARNING Check the following items before starting to run the Loop Control Unit:

- Analog Input/Output Units used in combination with the Loop Control Unit must be mounted correctly, and the unit number set on the front panel of the Analog Input/Output Unit must match the unit number set on the Field Terminal block. If the unit numbers do not match, input/output (read/write) is performed on the data of another Special I/O Unit (whose unit number is set on the Field Terminal block).
- The defaults of the System Common block on the Loop Control Unit must be set correctly. In particular, make sure that the Data Memory (D) for the Node Terminals on the CPU Unit used by the Loop Control Unit is not set in duplicate for other applications on the PC. If the application of the Data Memory is set in duplicate, the PC system may act unexpectedly and cause injury.
- When writing data to the I/O memory in the CPU Unit with function blocks (e.g., using Send All Blocks, Expanded DO/AO Terminal to CPU Unit, or DO/AO Terminal to CPU Unit), be sure that the words written to in the I/O memory are not being used for any other purpose. If I/O memory words are allocated to more than one purpose, the PC system may act unexpectedly and cause injury.

⚠WARNING Do not perform processing in such a way that the Loop Control Unit and CPU Unit perform writing on identical I/O memory addresses allocated to an contact output or analog output to an external Unit. If writing is performed on identical addresses, the externally connected load may act unexpectedly and cause injury.

4 Operating Environment Precautions

⚠**Caution** Do not operate the control system in the following places:

- Locations subject to direct sunlight
- Locations subject to temperature or humidity outside the range specified in the specifications
- Locations subject to condensation as the result of severe changes in temperature
- Locations subject to corrosive or flammable gases
- Locations subject to dust (especially iron dust) or salts
- Locations subject to exposure to water, oil, or chemicals
- Locations subject to shock or vibration

⚠**Caution** Take appropriate and sufficient countermeasures when installing systems in the following locations:

- Locations subject to static electricity or other forms of noise
- Locations subject to strong electromagnetic fields
- Locations subject possible exposure to radioactivity
- Locations close to power supplies

⚠**Caution** The operating environment of the PC System can have a large effect on the longevity and reliability of the system. Improper operating environments can lead to malfunction, failure, and other unforeseeable problems with the PC System. Be sure that the operating environment is within the specified conditions at installation and remains within the specified conditions during the life of the system.

5 Application Precautions

Observe the following precautions when using the PC.

⚠**WARNING** Always heed these precautions. Failure to abide by the following precautions could lead to serious or possibly fatal injury.

- Always connect to a class-3 ground (to 100 Ω or less) when installing the Units. Not connecting to a class-3 ground may result in electric shock.
- Always turn OFF the power to the PC before attempting any of the following. Not turning OFF the power may result in malfunction or electric shock.
  - Mounting or dismounting I/O Units
  - Assembling the Units
  - Setting DIP switches or unit number setting switches
  - Connecting or wiring the cables
  - Connecting or disconnecting the connectors

⚠**Caution** Failure to abide by the following precautions could lead to faulty operation of the PC or the system, or could damage the PC or PC Units. Always heed these precautions.

- To hold analog outputs or contact outputs at specific values (for example, maximum value or minimum value) when the Loop Control Unit has stopped running, create a Step Ladder Program on the CPU Unit so that each of the allocated relays on the Analog Output Unit or Contact Output Unit are set to a specific value taking the b contact of the Loop Control Unit Running flag (bit 00 allocated relay n word) as the input conditions.
- When a fatal error occurs on the CPU Unit (including during execution of the FALS command), the Loop Control Unit also stops running. To hold the analog output to the previous value before the stop occurred, and to set the analog output to either the minimum value or maximum value, use the output hold function of the Analog Output Unit or Analog Input/Output Unit.
- Before turning ON the power to the PC, make sure that the facilities are safe.

  The analog output values and contact outputs from the Loop Control Unit are updated at the same time that the power to the PC is turned ON regardless of the operation mode of the CPU Unit (including the PROGRAM mode). (Internally, the analog output values and contact outputs are sent via the CPU Unit to the Basic I/O Unit and Analog Output Unit.)
- The Loop Control Unit itself does not have a human interface. So, an external interface such as CX-Process Monitor must be provided.
- Fail-safe measures must be taken by the customer to ensure safety in the event of incorrect, missing, or abnormal signals caused by broken signal lines, momentary power interruptions or other causes.
- Before touching the PC, be sure to first touch a grounded metallic object in order to discharge any static build-up.
  Otherwise, it might result in a malfunction or damage.
- Before you replace the battery while the Loop Control Unit is ON, be sure to touch a grounded metal object to discharge any static electricity from your body
- Never short-circuit the plus and minus poles of the battery, charge, disassemble or heat the battery, or throw the battery into a fire.
- Interlock circuits, limit circuits, and similar safety measures in external circuits (i.e. not in the Programmable Controller) must be provided by the customer.
- Always use the power supply voltage specified in this manual. An incorrect voltage may result in malfunction or burning.
- Take appropriate measures to ensure that the specified power with the rated voltage and frequency is supplied. Be particularly careful in places where the power supply is unstable. An incorrect power supply may result in malfunction.
- Install external breakers and take other safety measures against short-circuiting in external wiring. Insufficient safety measures against short-circuiting may result in burning.
- Do not apply voltages to input sections in excess of the rated input

voltage. Excess voltages may result in burning.

- Do no apply voltages or connect loads in excess of the maximum switching capacity to output sections. Excess voltage or leads may result in burning.
- Turn OFF the power to the PC before performing the following operations:
  - Mounting or removing the Loop Control Unit, CPU Unit, or the Memory Pack
  - Assembling Racks
  - Setting the DIP switch or unit number setting switch
  - Performing wiring or connecting cables
  - When connecting or disconnecting cables
- Do not attempt to disassemble, repair, or modify any Units.
- Be sure to confirm that the DIP switch and the Data Memory (D) are properly set.
- Leave the dust-protection label attached to the top Unit when wiring. Removing the label may result in malfunction.
- Remove the labels after the completion of wiring to ensure proper heat dissipation. Leaving the label attached may result in malfunction.
- Mount the Unit only after checking the terminal block and switch settings completely.
- Be sure that all mounting screws, terminal screws, and cable connector screws are tightened to the torque specified in the user manuals. Incorrect tightening torque may result in malfunction.
- Check the user program for proper execution before actually running it on the Unit. Not checking the program may result in an unexpected operation.
- Use crimp terminals for wiring. Do not connect stranded wires directly to terminals. Connection of bare stranded wires may result in burning.
- Double-check all the wiring before turning ON the power supply. Incorrect wiring may result in burning.
- Confirm that no adverse effect will occur in the system before attempting any of the following:
  - Changing the operating mode of the PC
  - Force-setting/force-resetting of any contact in memory
  - Changing the present value or any set value in memory

6 EC Directives

CS1 Series Units confirm to EC Directives. For the system to conform to EC Directives, however, the following precautions must be adhered to.

- CS1 Series Units must be installed within control panel.
- Use reinforced insulation of double insulation for the DC power supplies used for the I/O power supplies.
- CS1 Series Units that meet EC Directives also meet the Common Emission Standard (EN50081-2). The measure necessary to ensure that standards, such as the radiated emission standard (10 m), are met, however, will vary depending on the overall configuration of the control panel, the other devices to the control panel, and wiring. You must therefore confirm that EC Directives are met for the overall machine or device.

7 Other Applicable Directives

Applicable Directives

- EMC Directive
- Low Voltage Directive

EMC and Low Voltage Directives

EMC Directive

In order that OMRON products can be used with any machinery and in combination with other manufacturer's equipment, the products themselves are designed to comply with EMC standards (see Note), so that the assembled machinery or device can then also easily comply with EMC standards.

Even if machinery and equipment complies with EMC standards before assembly, this compliance may change depending on the device, the configuration of the control panel, and wiring, so OMRON cannot guarantee that a particular system complies with the directive. You must therefore confirm that EMC Directives are met for the overall machine or device.

Note EMC: One directive relating to Electro-Magnetic Compatibility
EMS: Electro-Magnetic Susceptibility standard EN61131-2
EMI: Electro-Magnetic Interference standard EN50081-2

Common Emission Standard EN50081-2, radiated emission standard (10 m)

Low Voltage Directive

The Low Voltage Directive provides that necessary safety standards are guaranteed for devices operating at voltages of 50 to 1,000 VAC or 75 to 1,500 VDC.

SECTION 1
Specifications

1-1 OUTLINE 2

1-1-1 Outline 2
1-1-2 Features 3
1-1-3 Basic System Configuration 6
1-1-4 Application Examples 6
1-1-5 Loop Control Unit Mechanism 9
1-1-6 Overall Mechanism of Data Exchange 16
1-1-7 Internal Mechanism of Loop Control Unit 19
1-1-8 List of Function Blocks 20

1-2 CONFIGURATION OF INSTRUMENTATION SYSTEM 26

1-2-1 Mounting Location 26
1-2-2 Determining the System Configuration 27
1-2-3 Description of Basic System Configuration 29

1-3 SPECIFICATIONS 37

1-3-1 General Specifications 37
1-3-2 Specifications 37
1-3-3 Function Specifications 38
1-3-4 Outline of PID Block Specifications 41
1-3-5 Software Specifications 43

1-4 HOW TO USE FUNCTION BLOCKS FOR SPECIFIC OPERATIONS . 48

1-5 BASIC PROCEDURE FOR USING THE LOOP CONTROL UNIT 52

1-1 Outline

1-1-1 Outline

The Loop Control Unit is capable of the following:
- PID operation with up to 32 loops ∗1
- Operation of up to 250 various processes
- Basic logic sequence control
- Process progression control

The Loop Control Unit can also be used as an alarm/monitor terminal on a computer without the need to use PID control functions.

The Loop Control Unit belongs to the CPU Bus Unit group for the CS1 series PCs.

∗1 The maximum number of control loops is restricted by the operation cycle. In most cases (when there is no Step Ladder Program), the maximum number of control loops is 32 loops at operation cycles of 2, 1, and 0.5 seconds; 16 loops at an operation cycle of 0.2 seconds; and eight loops at an operation cycle of 0.1 seconds.

The Loop Control Unit itself has no external I/O functions. So, it must be used in a pair with a unit having an external interface such as an Analog I/O Unit or Basic I/O Unit. The Loop Control Unit exchanges data with the Unit having the external interface via the CPU Unit I/O memory.

You can achieve all functions (operation functions/designation of field input/output) simply by combining Control blocks, Operation blocks, and other function blocks. This allows you to easily build a professional instrumentation system on your PC (programmable controller).

The following functions can be achieved by function blocks:

Internal Operations

- Control (max. 32 function blocks): 2-position ON/OFF Basic PID, Advanced PID, Ratio Setting, etc.
- Operation (max. 250 function blocks): Alarm/Signal restrictions/Hold, Arithmetic (addition, subtraction, multiplication and division), Functions (Square Root, Absolute Value, Segment Linearizer, etc.), Time Functions (Lead/Delay, Dead Time, Ramp Program, etc.), Pulse Train Operation (Accumulator), Signal Selection/Switching (Rank Selector, Constant Selector, etc.), Sequential Control (Timers, Counter, etc.)
- External controllers (max. 32 function blocks): ES100X Controller Terminal
- Logic sequence/step progression control (max. 100 function blocks): Step Ladder Program

External I/O

- Each of the points on the Analog I/O Unit and Basic I/O Unit is read and written by the Field Terminal block (max. 80 function blocks).
- Specified contacts or analog data on the CPU Unit is read and written by the CPU Unit Terminal block (max. 16 function blocks) and the Expanded CPU Unit Terminal block (max. 32 function blocks).

- Data for Control, Operation, and External Controller blocks can be read and written for SCADA software by using the Send All Blocks block and Receive All Blocks block.
- Contacts, analog data, and Control blocks (max. 32 function blocks) are sent to the computer, and contacts with a Loop Control Unit mounted on a networked PC or analog data are read and written (send: max. 50 function blocks, receive: max. 100 function blocks) by the Node Terminal block.

Note Data in each of the function blocks can also be read and written by issuing the FINS command to the Loop Control Unit by the CMND (DELIVER COMMAND) command in the Step Ladder Program on the CPU Unit.

1-1-2 Features

All Functions Achieved by Using Only Function Blocks (operation functions/designation of field input/output)

Wiring function blocks in the software allows you to achieve not only combinations of operation blocks but also all functions including specification of field I/Os.

Almost All Control Types Freely Achieved by Combining Function Blocks

In addition to regular PID control, cascade control, feedforward control, dead time compensation control, override control and other special control types can be achieved as desired by combining function blocks for up to 32 loops. Control can also be easily configured for processes with prolonged dead time, non-linear processes, and processes involving fluctuating loads. Changes in control type after start of operation can also be flexibly accommodated.

Easy Integration of Loop Control and Sequence control

Data exchange with the CPU Unit and logic sequence/step progression control on the Loop Control Unit can be achieved. This allows you to easily integrate analog loop control and sequence control.

Data Exchange with Analog I/O Unit and Basic I/O Unit Achieved by Function Blocks

External analog I/O and contact I/O can be easily input and output by specifying the Analog I/O Unit on the PC and the Basic I/O Unit as the function block.

Logic Sequence Control and Step Progression Control Achieved by Function Blocks

Up to 4000 commands (mnemonic LOAD, OUT, etc.) can be programmed as a function block. This block can be further divided into separate steps so that program execution moves between steps when preset conditions are satisfied. This allows you to easily control step progression, for example, on devices that are analog process intensive.

Note Command execution on the Loop Control Unit is slower (0.1 to 2 second operation cycle) than that on a CPU Unit. So, these commands are used for programming AND and OR conditions when combining function blocks and specifying (Remote/Local, Auto/Manual, etc.) function block operating conditions.

Data Exchange with CPU Unit Achieved by Function Blocks

Contacts and analog data in CPU Unit I/O memory can also be read and written constantly (at each operation cycle) by specifying the I/O numbers of function blocks. This facilitates cooperative control in setting up and monitoring Step Ladder Programs on the CPU Unit.

Functions to monitor or set Loop Control Unit data from standard SCADA software have been improved. Two new function blocks, Receive All Blocks (Block Model 462) and Send all Blocks (Block Model 461) can be used to access Control Block (e.g., Basic PID), Operation Block (e.g., math functions), and External Controller Block (ES100X) data in the I/O memory of the CPU Unit using CSV tags created from the CX-Process Tool software.

I/O with Host Computer (via CPU Unit) Achieved by Function Blocks

Data can also be sent to the host computer connected on the Host Link or the computer (on which the Controller Link Support Board is mounted) connected on the Controller Link by designating the function block. (Note, however, that data is only stored to the Data Memory for the Node Terminals on the CPU Unit. Subsequent processing is dependent on accessing by FINS commands issued from the host computer or on the Data Link with the computer on the Controller Link.)

The contacts and analog data of the Loop Control Unit mounted on a networked PC can also be read and written via the Controller Link by designating the function blocks. (Note, however, that data is only stored to the Data Memory for the Node Terminals on the CPU Unit. Subsequent processing is dependent on the Data Link with the PC on the Controller Link.

Message Communications by FINS Commands

Data on each of the function blocks can also be read and written as desired by issuing FINS commands by the CMND (DELIVER COMMAND) command in the Step Ladder Program on the CPU Unit or by issuing FINS commands from the host computer. Function block data can also be read and written from PCs (CPU Units) on other networked nodes.

Simulated Software Wiring between Function Blocks

CX-Process Tool allows you to simulate wiring between function blocks in the software by joining lines on your computer’s screen.

Simulated Monitoring of Monitor, Graphic Monitor, and Alarms

CX-Process Monitor or SCADA software can be used to monitor the control state and change settings on the Loop Control Unit in a screen that is similar to a field device. CX-Process Monitor also supports graphic monitoring, generation of trend graphs, alarm monitoring, alarm logging and operation logging of each of the instrumentation components. Commercially available SCADA software can also be used to create a monitoring system.

The CX-Process Tool is used to create tags for the CX-Process Monitor or for SCADA software to enable accessing Loop Control Unit Data.

Connect ES100X Controllers Externally

ES100X Controllers can be connected to the RS-232C port on the Loop Control Unit and ES100X External Controller Terminal function blocks can be used to monitor ES100X parameters, such as the SP, PV, and MV, and to set ES100X parameters, such as the SP and PID constants. Converting from RS-232C to RS-422A/485 enables connecting up to 32 ES100X Controllers.

Battery-free Operation

You now have a choice. You can either store function block data in RAM in the Loop Control Unit and back it up with a battery or you can eliminate the need for a backup battery by setting the Loop Control Unit to transfer flash memory contents to RAM each time power is turned ON. (Automatic transfer from flash memory is set using the DIP switch.)

1-1-3 Basic System Configuration

1, 2, 3… 1. Unit Having External Interface Functions

The Loop Control Unit itself does not have external analog I/O and external contact I/O functions. So, it must be used in combination with a Unit having external interface functions such as an Analog I/O Unit as shown in the example figures in the following pages.

2. CX-Process Tool

The Loop Control Unit itself does not have a human-machine interface for preparing function block data. So, function block data must be prepared on CX-Process Tool, and then downloaded to the Loop Control Unit for use as shown in the example figures in the following pages.

3. CX-Process Monitor

The Loop Control Unit itself does not have a human-machine interface for setting the Set Point and PID constant values, and displaying the PV. So, the Set Point and PID constant values must be set, and PV monitored on CX-Process Monitor as shown in the example figures in the following pages.

1-1-4 Application Examples

The Loop Control Unit can be used, for example, to build control systems capable of high-density monitoring of analog data through to advanced control of instrumentation such as in the following four examples.

High-density Monitoring of Waterworks and Sewage Systems

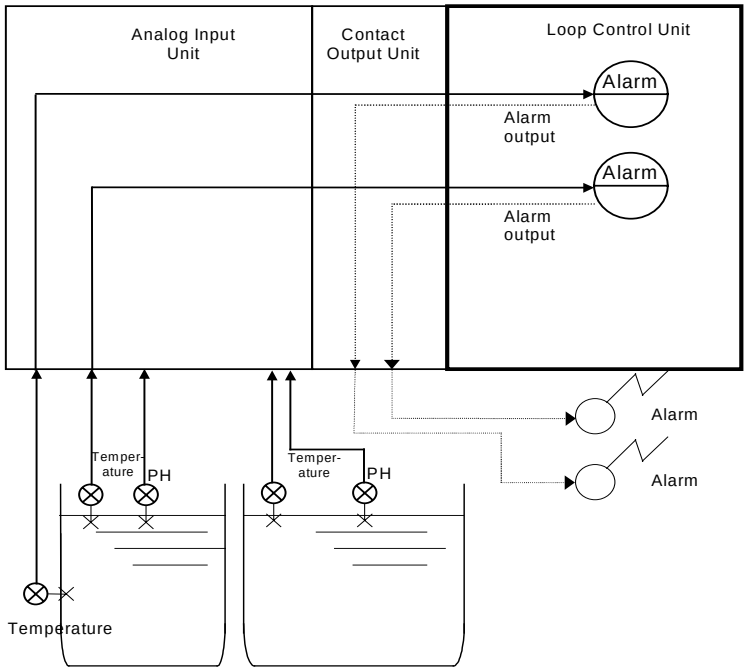

Temperature Control of Kettle Reboiler (cascade control)

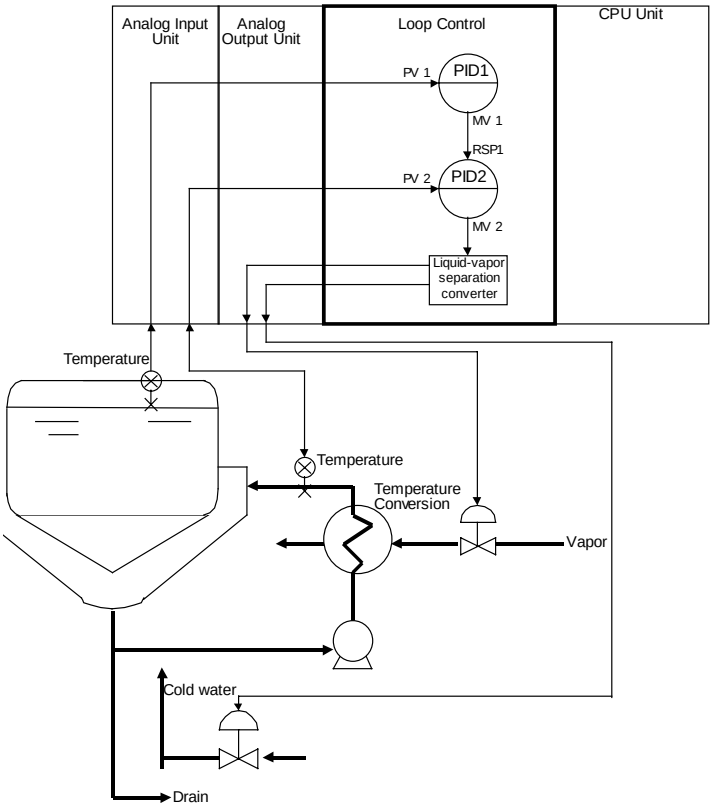

Boiler Drum Level Control (with cascade feedforward control function)

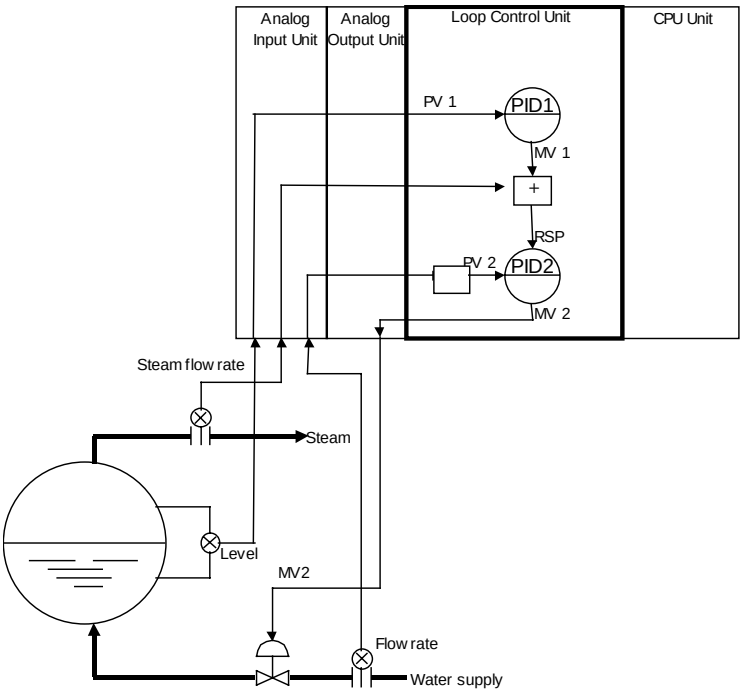

Heat Exchanger Exit Temperature Control (with cascade feedforward control)

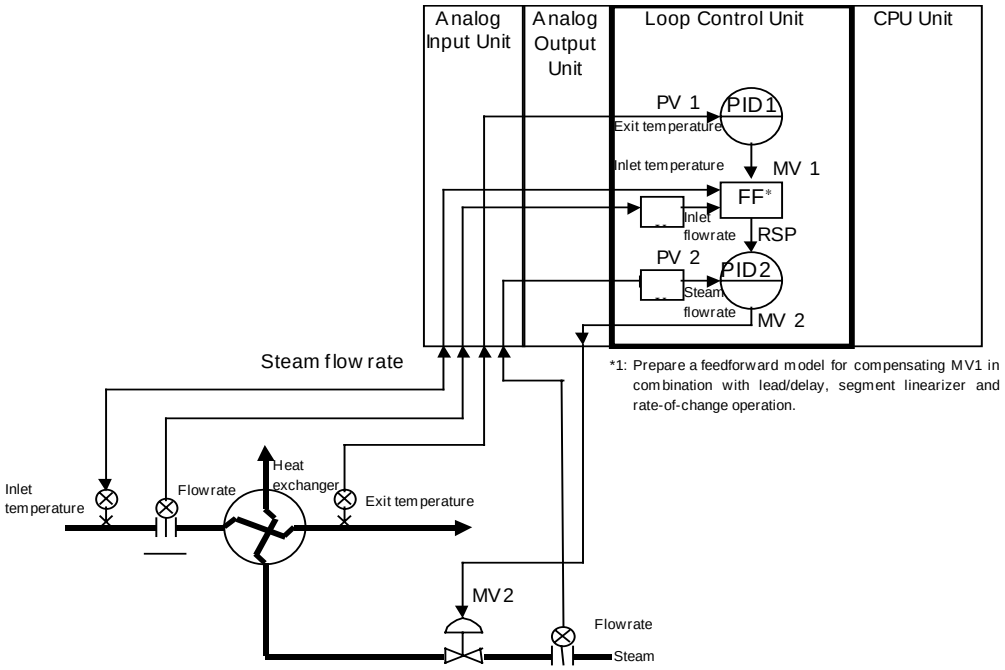

1-1-5 Loop Control Unit Mechanism

Overall Mechanism

The following illustration shows a block diagram of the overall mechanism.

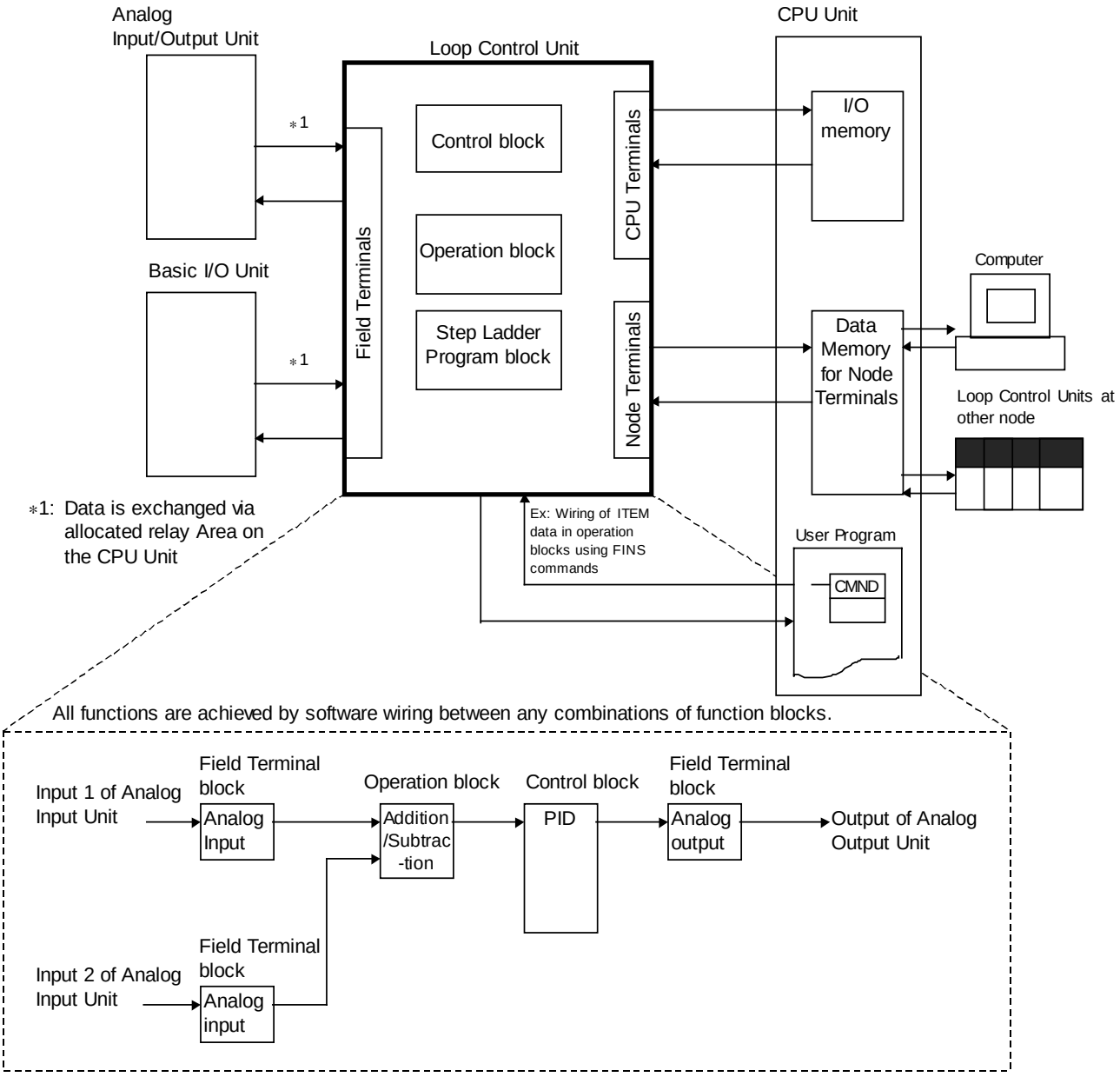

The following describes each of the functions of the Loop Control Unit.

1) External I/O

⚠WARNING Do not perform writing operations on the same I/O memory address allocated to contact outputs or analog outputs between the Loop Control Unit and the CPU Unit.

If writing is performed on the same address, the externally connected load may function unexpectedly, causing an injury.

Analog I/O or Contact I/O

Analog signals or contact signals are input and output constantly (at each operation cycle) between the Analog I/O Unit or Basic Unit on the same PC and the CPU Unit I/O memory. At this time, the user is not required to be aware of I/O memory addresses as the Field Terminal block is used.

With analog I/O, only the unit number of the Analog I/O Unit is set. With contact I/O, however, the leading allocated address in I/O memory must be set.

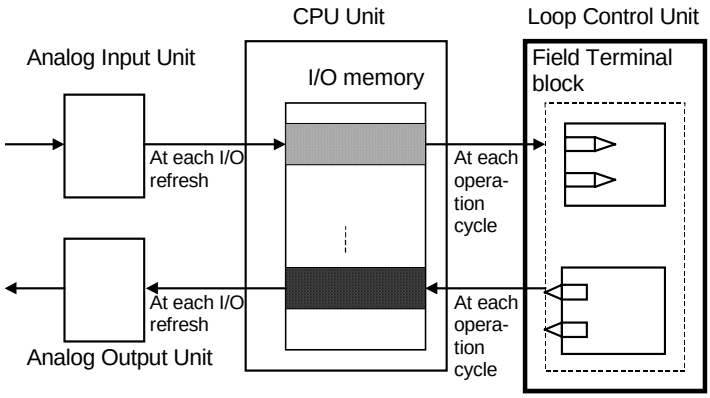

Note The Loop Control Unit uses the Field Terminal block (regardless of the user program on the CPU Unit) to read and write areas allocated for contact or analog signals. So, do not perform write operations on the same allocated areas between the Loop Control Unit and the CPU Unit.

Data Exchange with Specified CPU Unit I/O Memory

I/O operations can be performed internally on the Loop Control Unit constantly (at each operation cycle) with any specified CPU Unit I/O memory. In this case, the CPU Unit Terminal block or the Expanded CPU Unit Terminal block is used, and the I/O memory address must be specified.

Data exchange is possible with the following I/O memories:

- CIO (channel I/O) Area
- Work Area (W)
- Holding Area (H)
- Data Memory (D)
- Extended Data Memory (E) bank No. 0

Note 1 This function can also be used to designate units (CompoBus/D, CompoBus/S and other Communications Units) on which field terminals are not supported, and CPU Unit I/O memory (remote I/O allocated area, etc.) for enabling I/O.

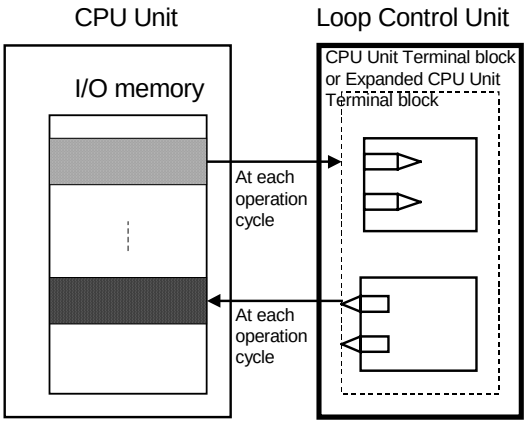

Note 2 The Loop Control Unit uses the CPU Unit Terminal block or the Expanded CPU Unit Terminal block (regardless of the user program on the CPU Unit) to read and write to specified CPU Unit I/O memory. So, do not perform write operations on the same I/O memory addresses between the Loop Control Unit and the CPU Unit.

Data Exchange with CX-Process Monitor

Loop Control Unit data can be exchanged with CX-Process Monitor. Data or analog signals for controller use can be uploaded to CX-Process Monitor running on a computer connected via the RS-232C interface or a network such as Controller Link.

Data such as the Set Point Values can also be changed on CX-Process Monitor.

There are two data exchange modes: on-demand mode and Data Link mode. (For details, see *3-4 Exchanging Data with CX-Process Monitor/SCADA Software and Other Nodes* and *Appendix-2 How to Use the Node Terminal Blocks*.)

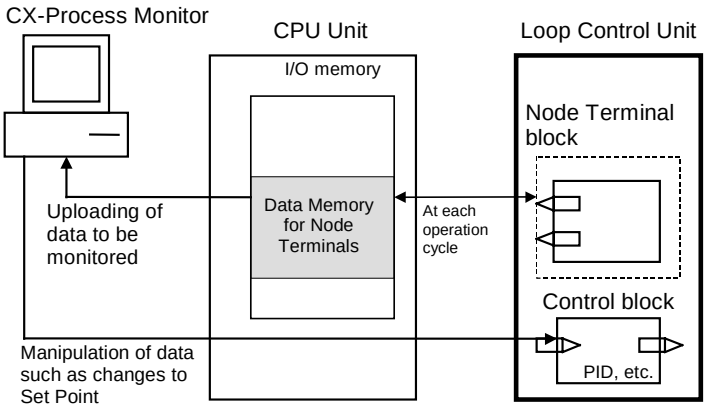

Data Exchange with SCADA Software

Commercially available SCADA software can also be used to read and write function block data for the Loop Control Unit. Words in the I/O memory of the CPU Unit are allocated for function block data so that Control Block, Operation Block, and External Controller Block data can be read and written using CSV tags with SCADA software. Expanded CPU Unit Terminal blocks can also be used to read and write data using CSV tags for other ITEMs. CSV tags are created using the CX-Process Tool.

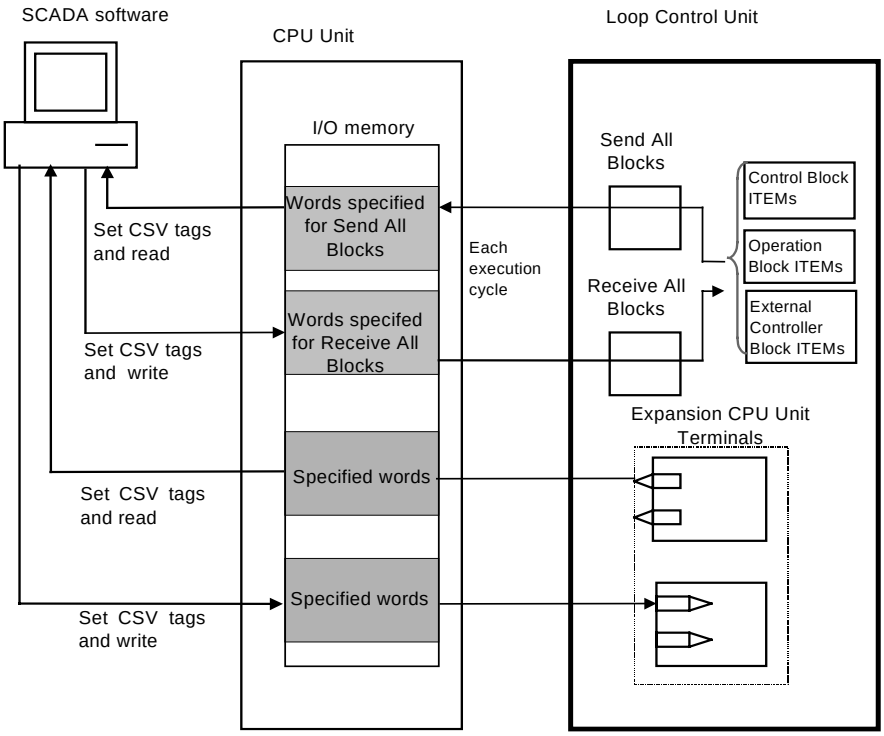

Data Exchange with Loop Control Units at Other Nodes

Loop Control Unit data can be exchanged with Loop Control Units at other nodes via Controller Link.

The following two methods can be selected.

1) When part of the data link is used (CPU Unit Terminal or Expanded CPU Unit Terminal block)

The PC on which the Loop Control Unit is mounted is linked via the regular Controller Link Data Link with the PC at the other node. On this link, the Loop Control Unit reads and writes analog signals or contact signals on part of the Data Link Area on the CPU Unit by the CPU Unit Terminal or Expanded CPU Unit Terminal block.

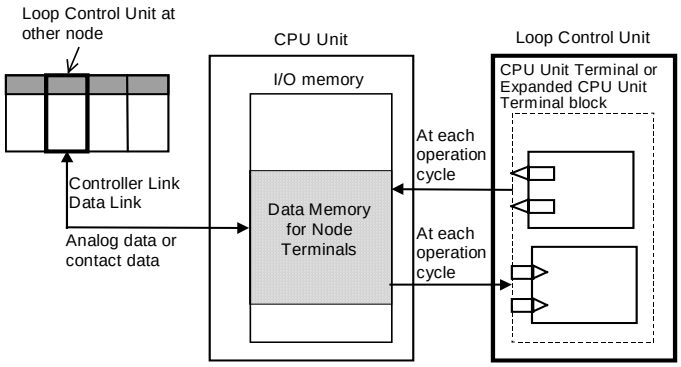

2) When Data Link Area 1 or 2 are occupied (Node Terminal block used)

The PC on which the Loop Control Unit is mounted occupies Data Link Area 1 or 2 for Loop Control Unit use, and is linked via the Controller Link Data Link with the PC at the other node. Data Memory (D) for the Node Terminals of the CPU Unit is allocated to Data Link Area. On this link, the Loop Control Unit can exchange data with the other Loop Control Unit at the other node PC by reading and writing Data Memory (D) for the Node Terminals of that CPU Unit by the Node Terminal block.

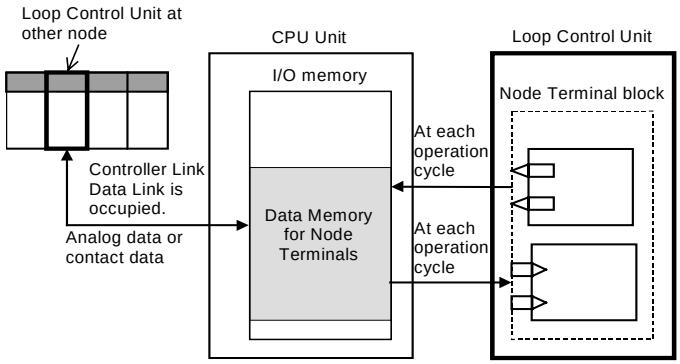

2) Internal processing

- Prepare a data sheet for the function blocks shown below on CX-Process Tool, and store the data sheet on the Loop Control Unit. The function block data sheet describes: (a) software wiring of each function block and (b) parameters in each function block.

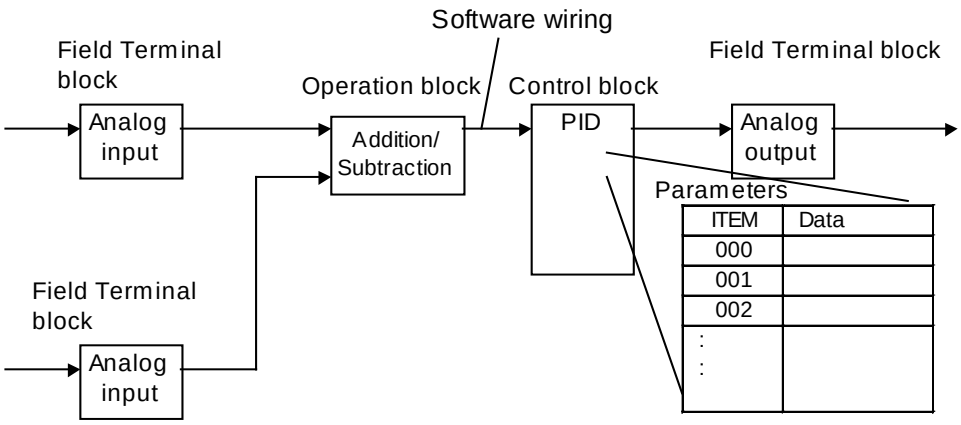

- The Loop Control Unit handles analog I/O signals not in engineering units but in percentage units.

Example 1 At analog input, the converted values 0000 to 0FA0 (FF38 to 1068) Hex from the Analog Input Unit for input 4 to 20 mA (3.2 to 20.8 mA) are converted to 0.00 to 100.00% (-5.00 to 105.00%) before they are processed by the Loop Control Unit.

Example 2 At analog input, the converted values F830 to 07D0 (F768 to 0898) Hex from the Analog Input Unit for input -10 to +10 mV (-11 to +11 V) are converted to 0.00 to 100.00% (-5.00 to 105.00%) before they are processed by the Loop Control Unit.

Example 3 At analog output, the values 0.00 to 100.00% (-5.00 to 105.00%) are converted to setting values 0000 to 0FA0 (FF38 to 1068) Hex before 4 to 20 mA (3.2 to 20.8 mA) is output from the Analog Output Unit.

Note Converted values (in the case of analog input) for 0 to 100% on the Loop Control Unit and setting values (in the case of analog output) for 0 to 100% on the Loop Control Unit are fixed to the same values as the user ranges. However, in the case of isolated-type Analog Input Units (CS1W-PTS01/02/03, PTW01, PDC01, PPS01, PTR01), the Analog Input Unit itself has a range setting function. So, any values can be specified as the converted values (on condition that the same setting as the range setting is made).

- Likewise, data exchange with the CPU Unit is handled not in engineering units but in percentage units. Values in I/O memory words are converted to percentage units based upon the specified range before they are input to the Loop Control Unit. Alternatively, percentage values are converted to Hex values based upon the specified range before they are output to CPU Unit I/O memory.

Example 1 At input from the CPU Unit, the values of 0000 to 0FA0 Hex in the I/O memory words are converted to 0.00 to 100.00% before they are input to the Loop Control Unit when the range 0 to 4000 (0000 to 0FA0 Hex) is specified.

Example 2 At output to the CPU Unit, the values of 0.00 to 100.00% are converted to 0000 to 0FA0 Hex before they are output to the Control Unit when the range 0 to 4000 (0000 to 0FA0 Hex) is specified.

Note 1 In data exchange with the CPU Unit, data can be actually exchanged within the range -320.00 to +320.00% and not within the range 0.00 to 100.00%. So, in the above example, the conversion range for 0 to 4000 (0000 to 0FA0 Hex) is 0.00 to +100.00. However, in actual operation, 8300 to FFFF Hex and 0000 to 7D00 Hex are converted to -320.00 to -0.01 and 0.00 to +320.00%, respectively, before they are processed.

Note 2 Any data range in CPU Unit I/O memory corresponding to 0 to 100% on the Loop Control Unit can be specified. (The data range is dependent on the specified input range and output range on the CPU Unit Terminal block or the Expanded CPU Unit Terminal block.)

CX-Process Tool scales these percentage values to engineering units values, and CX-Process Monitor monitors and sets the values in engineering units. (For details, see *3-1 Configuration of Function Blocks*.)

Note 3 The Loop Control Unit does not process analog data in engineering units (scaled values). (All analog data is processed in percentage values.) To monitor/and set analog data in engineering units, the analog data must be scaled on CX-Process Tool and then monitored and set on CX-Process Monitor.

1-1-6 Overall Mechanism of Data Exchange

The following block diagram shows the overall mechanism of data exchange.

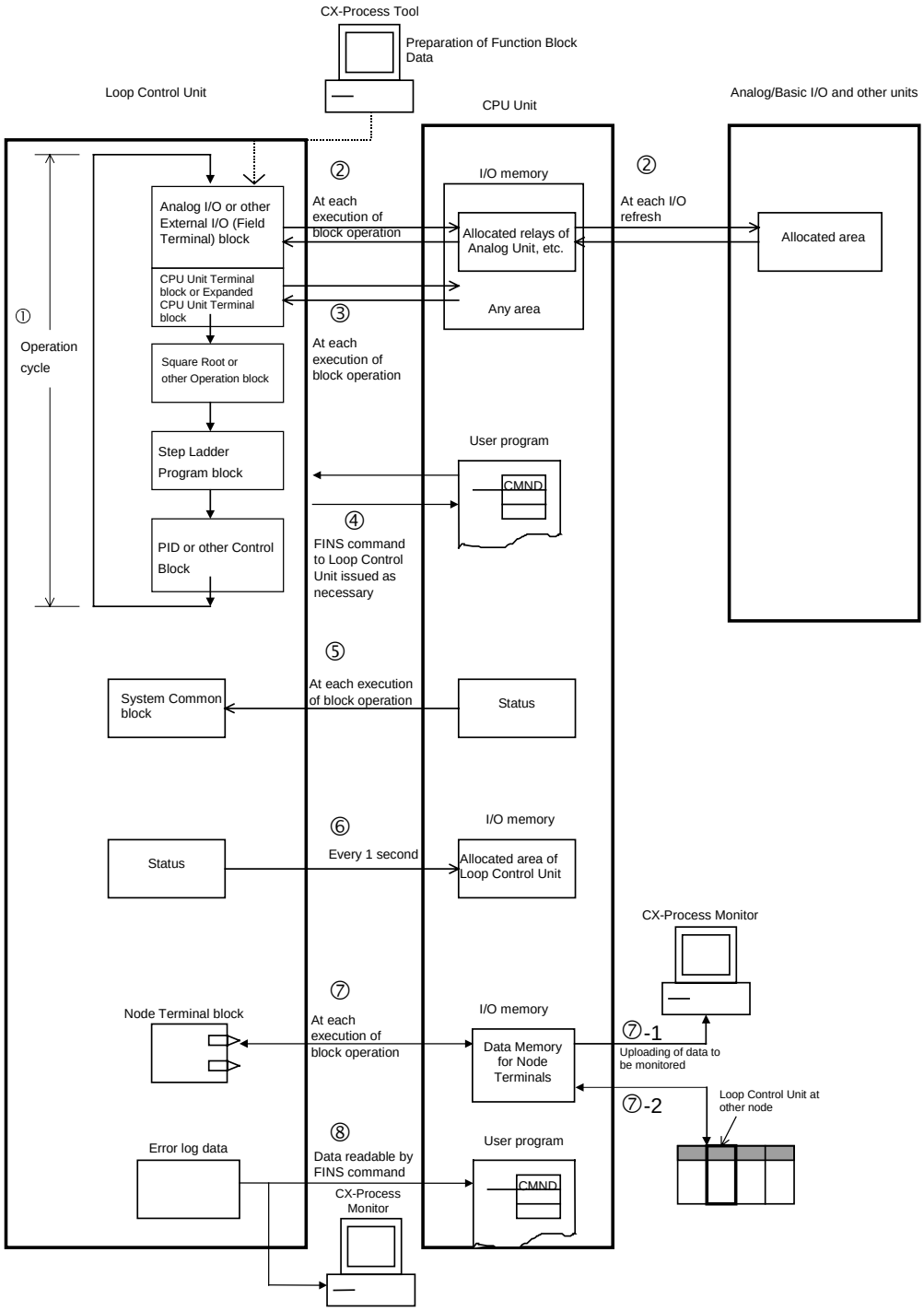

① Function Block Operations (independent of and asynchronous with CPU Unit)

The function blocks on the Loop Control Unit are cyclically executed according to fixed operation cycles. Operations are executed asynchronously with the user program on the CPU Unit.

The operation cycle is one of 0.1, 0.2, 0.5, 1 or 2 seconds (*1), and can be specified to each function block. (The default operation cycle is one second for each function block.)

Operation is started when the PC is turned ON regardless of the CPU Unit operation mode.

*1 The execution cycle for commands in the Step Ladder Program block (Block Model 301) on the Loop Control Unit is one of 0.1, 0.2, 0.5, 1 or 2 seconds for each operation cycle in the Step Ladder Program block. The command execution cycle is longer than the cycle time of commands in the Step Ladder Program on the CPU Unit.

② External I/O (via the CPU Unit I/O memory)

The Loop Control Unit actually updates external I/O data from each unit via CPU Unit I/O memory at each operation cycle of the Field Terminal block.

③ Constant Data Exchange with CPU Unit (by Function block)

The Loop Control Unit refreshes data I/O with specified CPU Unit I/O memory areas at each operation cycle of the CPU Unit Terminal block or the Expanded CPU Unit Terminal block.

④ On-demand Data Exchange with CPU Unit (by FINS command issued to Unit)

The CPU Unit can read and write Loop Control Unit data by issuing the FINS command to the Loop Control Unit by the CMND (DELIVER COMMAND) command in the Step Ladder Program whenever necessary.

⑤ CPU Unit Status Notification (by reflecting in System Common block)

The status of the CPU Unit (operation mode, fatal error, etc.) is reflected in the System Common block on the Loop Control Unit. If necessary, the Loop Control Unit extracts data from this System Common block.

⑥ Loop Control Unit Status Notification (by allocated CIO Area)

The status of the Loop Control Unit is reflected on the CPU Unit at the CIO Area allocated as the CPU Bus Unit. Note, however, that this status is reflected every second and not at the I/O refresh cycle.

⑦ Data Exchange with CX-Process Monitor and Loop Control Units at Other Nodes (by Node Terminal block)

The Data Memory for node terminals is allocated to the CPU Unit Data Memory area comprising the following two areas:

⑦-1 Data exchange area with CX-Process Monitor

⑦-2 Data exchange area with Loop Control Unit at other node

For either area, the Node Terminal block is used for performing data exchange constantly (at each operation cycle) with CX-Process Monitor or Loop Control Units at other nodes.

⑧ Reading of Error Log Data on Loop Control Unit

Error log data is stored on the Loop Control Unit. (The error code, detailed information, date (year/month) and time (hour/minute/second) of occurrence are recorded as one error log data record, and the latest 256 data records are stored.) Error log data can be read using the read error log FINS command (command code 2102 Hex).

Note Relationship between CPU Unit I/O Memory and Loop Control Unit
The Loop Control Unit can read from and write to CPU Unit I/O memory by the methods indicated in the following table.

Data direction	Purpose of data on Loop Control Unit			
	Loop Control Unit ↔ CPU Unit	Loop Control Unit ↔ CPU Unit	Loop Control Unit → CPU Unit	Loop Control Unit → CPU Unit
I/O memory area type on CPU Unit	Reading or writing at CPU Unit Terminals, Expanded CPU Unit Terminals, or Send/Receive All Blocks ② : possible, —: impossible	Reading or writing at field terminals	Writing at data memory for node terminals	Writing using allocated area for CPU Bus Unit
CIO	②	Reading/writing of CIO area on corresponding unit at field terminals	—	Notification of Loop Control Unit status
Work Area (W)	②	—	—	—
Holding Area (H)	②	—	—	—
Auxiliary Area	—	—	—	—
Temporary Relay Area	—	—	—	—
Tmer	—	—	—	—
Counter	—	—	—	—
Data Memory Area (D)	②	—	Up to 3836 words allocated for use for CX-Process Monitor	—
Extended Data Memory Area (E)	② (bank No.0 only)	—	—	—

1-1-7 Internal Mechanism of Loop Control Unit

The following describes the internal mechanism of the Loop Control Unit.

- Function block data and error log data are backed up by internal battery in RAM. During actual operation, the Loop Control Unit used the data in RAM.
- Function block data is prepared and downloaded to RAM in the Loop Control Unit from CX-Process Tool running on the computer.

  From the CX-Process Tool, you can transfer data between RAM and flash memory whenever necessary, or you can set the Loop Controller Unit to automatically transfer the contents of flash memory to RAM whenever power is turned ON. This enables operation without a backup battery. (Error log data, however, is not backed up without a battery, i.e., it is not store in flash memory.)
- Error log data can be read using the READ ERROR LOG FINS command (command code 2102 Hex). Error log data is not stored in flash memory.
- In the default state, function block data is not stored on the Loop Control Unit. Function block data must be downloaded from a computer before the Loop Control Unit can be run.

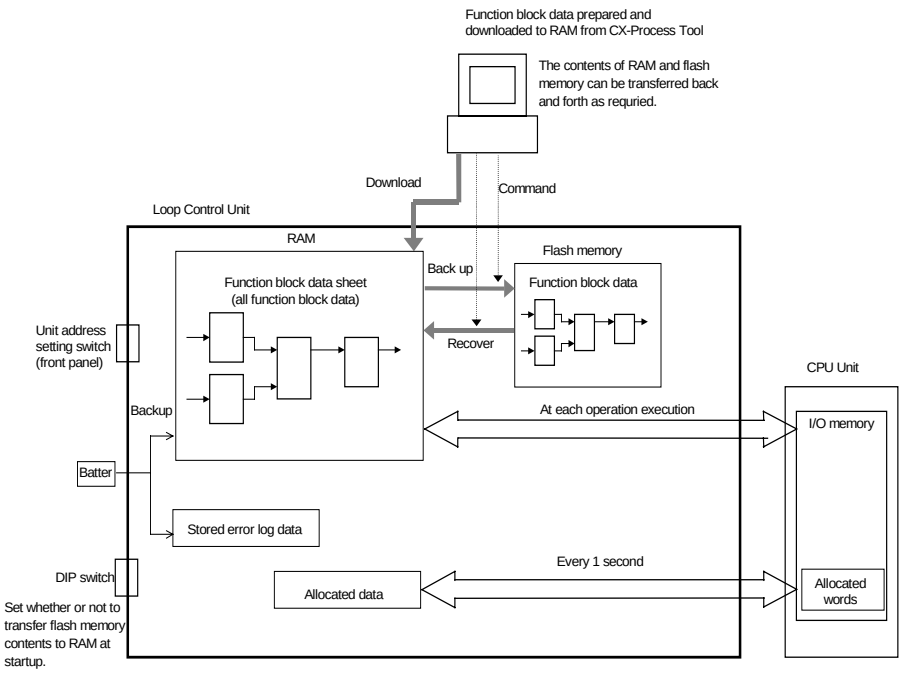

Note:

- Function block data in RAM can be backed up to flash memory using the CX-Process Tool. Refer to the *CX-Process Tool Operation Manual* for details.
- Function block data in flash memory can be restored to RAM. This can be achieved either automatically at startup (set by turning ON pin 2 of the DIP switch) or by using the CX-Process Tool. The use of the DIP switch is described later in this manual. Refer to the *CX-Process Tool Operation Manual* for details on using the CX-Process Tool.

1-1-8 List of Function Blocks

The following function blocks are combined and used in Loop Control Units.

Category	Type	Block model	Block name	Function	Allocatable block address
System Common Block	System Common Block	000	System Common	Makes settings common to all function blocks and outputs signals for the system.	000
Control Block	Controller	001	2-position ON/OFF	2-position type ON/OFF controller	001 to 032
		002	3-position ON/OFF	3-position type ON/OFF controller for heating/cooling ON/OFF control	
		011	Basic PID	Performs basic PID control.	
		012	Advanced PID	Performs PID with two degrees of freedom control for enabling deviation/MV compensation, MV tracking, etc.	
		013	Blended PID	Performs PIF control on the cumulative value (cumulative deviation) between the accumulated value PV and accumulated value Remote Set Point.	
		014	Batch Flowrate Capture	Functions to open the valve at a fixed opening until a fixed batch accumulated value is reached.	
		016	Fuzzy Logic	Inputs up to eight analog inputs and then outputs up to two analog outputs based on fuzzy inferences.	
		031	Indication and Setting	Manual setter with PV indication and and SP setting functions	
		032	Indication and Operation	Manual setter with PV indication and MV setting functions	
		033	Ratio Setting	Ratio and bias setter with PV indication and ratio setting function	
		034	Indicator	PV indicator with PV alarm	
External Controller Block	External Controller Block	045	ES100X Controller Terminal	Performs monitoring and setting for an ES100X Controller connected directly to the RS-232C port on the Loop Control Unit.	065 to 096
Operation Block	Alarm/Signal restrictions/ Hold	110	4-Point Warning Indicator	Provides the alarm contact outputs for the high/high, high, low, and low/low limits of single analog signals. This function block provides the same function as the Indicator block (model 034).	100 to 349 (Note: 349 is an internal switch in CX-Process Tool (One Block Model 209 is already allocated as the default.))
		111	High/Low Alarm	Provides the alarm contact outputs for the high and low limits of single analog signals.	
		112	Deviation Alarm	Provides the alarm contact outputs for the deviation of two analog signals.	
		113	Rate-of-change Operation and Alarm	Provides the alarm contact outputs for the high and low limits of rate-of-change operation when the analog signal rate-of-change is output.	
		115	High/Low Limit	Limits the high and low limits of single analog signals.	
		116	Deviation Limit	Calculates the deviation between two analog signals, and limits the deviation within that range.	
		118	Analog Signal Hold	Holds the maximum, minimum or instantaneous value of single analog signals.	
	Arithmetic	121	Addition or Subtraction	Performs addition/subtraction with gain and bias on up to 4 analog signals.	
		122	Multiplication	Performs multiplication with gain and bias on up to 2 analog signals.	
		123	Division	Performs division with gain and bias on up to 2 analog signals.	
		126	Arithmetic Operation	Performs various math operation (trigonometric. logorithmic, etc.) on floating-point decimal values converted (to industrial units) from up to 8 analog inputs.	
		127	Range Conversion	Converts analog ranges for up to eight analog signals based only on values input for 0% and 100% inputs and 0% and 100% outputs.	

Category	Type	Block model	Block name	Function	Allocatable block address
Operation Block (continued)	Functions	131	Square Root	Performs square root extraction (with low-end cutout) on single analog signals.	100 to 349 (Note: 349 is an internal switch in CX-Process Tool (One Block Model 209 is already allocated as the default.))
		132	Absolute Value	Performs non-linear (3 gain values) operation on single analog signals. Analog signals can also set as a dead band (with different gap).	
		133	Non-linear Gain (Dead Band)	Outputs the absolute value of single analog signals.	
		134	Low-end Cutout	Sets output to zero close to the zero point of single analog signals.	
		135	Segment Linearizer	Converts single analog sigals to 15 segments before the signals is output.	
		136	Temperature And Pressure Correction	Performs temperature and pressure correction.	
	Time Function	141	First-order Lag	Performs first-order lag operation on single analog signals.	
		143	Rate-of-change Limit	Performs rate-of-change restriction on single analog signals.	
		145	Moving Average	Performs moving average operation on single analog signals.	
		147	Lead/Delay	Performs lead/delay operation on single analog signals.	
		148	Dead Time	Performs dead time and first-order lag operations on single analog signals.	
		149	Dead Time Compensation	Used for Smith's dead time compensation PID control	
		150	Accumulator for instantaneous value input	Accumulates analog signals, and outputs 8-digit accumulated value signals.	
		151	CPU Unit Running Time Accumulator	Accumulates the operating time, and outputs the pulse signal per specified time.	
		153	Time Sequence Data Statistics	Records time sequence data from analog signals and calculates statistics, such as averages and standard deviations.	
		155	Ramp Program	Ramp program setter for combining ramps for time and hold values.	
		156	Segment Program	Segment program setter setting the output values with respect to time.	
		157	Segment Program 2	Segment program setting with wait function for setting the output values with respect to time	
	Signal Selection/ Switching	161	Rank Selector	Selects the rank of up to 8 analog signals.	
		162	Input Selector	Selects the specified analog signals specified by the contact signal from up to 8 analog signals.	
		163	3-input Selector	Selects and outputs one of three analog input signals.	
		164	3-output Selector	Outputs one analog input signal in three switched direction.	
		165	Constant Selector	Selects 8 preset constants by the contact signal.	
		166	Constant Generator	Outputs 8 independent constants.	
		167	Ramped Switch	Creates a ramped switch based on two analog inputs or constants.	
	ITEM Settings	171	Constant ITEM Setting	Writes the constant to the specified ITEM at the rising edge of the send command contact.	
		172	Variable ITEM Setting	Writes the analog signal to the specified ITEM at the rising edge of the send command contact.	
		174	Batch Data Collector	Stores each of max. 8 analog inputs to buffer by a certain timing within sequential processing.	
		182	Accumulated Value Input Adder	Adds up to four accumulated value signals.	
		183	Accumulated Value Analog Multiplier	Multiplies analog signals by the accumulated value signals.	

Category	Type	Block model	Block name	Function	Allocatable block address
Operation Block (continued)	Pulse Train Operation	184	Accumulator for accumulated value input	Converts 4-digit accumulated value signals to 8 digits.	100 to 349 (Note: 349 is an internal switch in CX-Process Tool (One Block Model 209 is already allocated as the default.))
		185	Contact input/Accumulated value output	Counts low-speed contact pulses, and outputs 8-digit accumulated signals.	
		186	Accumulated Value Input/Contact Output	Converts 4-digit accumulated value signals to low-speed contact pulses before they are output.	
	Others	192	Analog/Pulse Width Converter	Changes the ON/OFF duration ratio in a constant cycle duration so that it is proportional to the analog signal.	
	Sequence Operation	201	Contact Distributor	Connect contact signals between function blocks in a 1:1 connection.	
		202	Constant Comparator	Compares up to eight sets of analog signals and constants, and outputs the comparison results as contacts.	
		203	Variable Comparator	Compares up to eight pairs of analog signals, and outputs the comparison results as contacts.	
		205	Timer	2-stage output-type addition timer for forecast values and reached values. Can also output the present value.	
		206	ON/OFF Timer	Timer for performing ON-OFF operation at preset ON and OFF times.	
		207	Clock Pulse	Outputs clock pulses that turn ON for one operation cycle only at each set time.	
		208	Counter	2-stage output type addition timer for forecast values and arrival values. Can also output the current value.	
		209	Internal Switch	Temporary storage contact for accepting relays in the Step Ladder Program block. (Note: One internal switch is already allocated as "temporary storage" in CX-Process Tool.)	
		210	Level Check	Checks the level of an analog input for eight levels and outputs contacts according to the level. The level number is also output via an analog output.	
	Contact Type Control Target	221	ON/OFF Valve Manipulator	Manipulates and monitors ON/OFF valves with open/close limit switches.	
		222	Motor Manipulator	Manipulates and monitors motor operation.	
		223	Reversible Motor Manipulator	Manipulates and monitors reversible motor operation.	
		224	Motor Opening Manipulator	Inputs a target opening, and manipulates an electric positional-proportional motor.	
Sequential Control		301	Step Ladder Program	Performs logic sequence and step progression control.	400 to 499
Node Terminal	Send to Computer	401	DO to Computer	Sends 128 contacts to the send-to-computer area. When CX-Process Monitor is used, the contact signals to be monitored are connected to this function block.	501 to 532
		402	AO to Computer	Sends 16 analog values to the send-to-computer area. When CX-Process Monitor is used, the analog signals to be monitored are connected to this function block.	
		403	1-Block Send Terminal to Computer	Sends a specified 1 block to the send-to-computer area. When CX-Process Monitor is used, the 1 block to be monitored are connected to this function block.	
		404	4-Block Send Terminal to Computer	Sends a specified 4 block to the send-to-computer area. When CX-Process Monitor is used, the 4 block to be monitored are connected to this function block.	

Category	Type	Block model	Block name	Function	Allocatable block address
Node Terminal, continued	Send to All Nodes	407	DO Terminal to all nodes	Sends 32 contacts to nodes on the Controller Link Data Link.	550 to 599
		408	AO Terminal to all nodes	Sends 2 analog values to nodes on the Controller Link Data Link.	
	Send to All Nodes	409	DO Terminal Settings from Computer	Receives 32 contacts sent from the computer. (Can also be downloaded to the send-to-all nodes area.)	550 to 599
		410	AO Terminal Settings from Computer	Receives 2 analog values sent from the computer. (Can also be downloaded to the send-to-all nodes area.)	
	Receive from All Nodes	414	DI Terminal from all nodes	Receives 32 contacts sent from nodes on the Controller Link Data Link.	600 to 699
Node Terminal (continued)	Receive from All Nodes (continued)	415	AI Terminal from all nodes	Receives 2 analog values sent from nodes on the Controller Link Data Link.	
CPU Unit Terminal		451	DI Terminal from CPU Unit	Inputs max. 128 points from any leading address in CPU Unit I/O memory (one of CIO, WR, HR, DM and EM area types). (read)	861 to 876
		452	DO Terminal to CPU Unit	Outputs max. 128 points from any leading address in CPU Unit I/O memory (one of CIO, WR, HR, DM and EM area types). (read and write)	
		453	AI Terminal from CPU Unit	Inputs max. 8 words from any leading address in CPU Unit I/O memory (one of CIO, WR, HR, DM and EM area types). (read)	
		454	AO Terminal to CPU Unit	Outputs max. 8 words from any leading address in CPU Unit I/O memory (one of CIO, WR, HR, DM and EM area types). (read and write)	
SCADA Interface	Expanded CPU Unit Terminal	455	Expanded DI Terminal from CPU Unit	Inputs any contact data in CPU Unit I/O Memory, and writes max. 64 points on another function block.	829 to 860
		456	Expanded DO Terminal from CPU Unit	Inputs the contact data of another function block, and writes max. 64 points on any I/O Memory in the CPU Unit.	
		457	Expanded AI Terminal from CPU Unit	Inputs any analog data in CPU Unit I/O Memory, and writes max. 64 words on another function block.	
		458	Expanded AO Terminal from CPU Unit	Inputs the analog data of another function block, and writes max. 64 words on any CPU Unit I/O Memory.	
	Send/ Receive All Blocks	461	Receive All Blocks	Reads ITEM data specified for Send/ Receive All Blocks for up to 32 Control Blocks, 249 Operation Blocks, and 32 External Controller Blocks starting from a specified address in the I/O memory of the CPU Unit.	897
		462	Send All Blocks	Writes ITEM data specified for Send/ Receive All Blocks for up to 32 Control Blocks, 249 Operation Blocks, and 32 External Controller Blocks starting to a specified address in the I/O memory of the CPU Unit.	898

Category	Type	Block model	Block name	Function	Allocatable block address
Field Terminal	Contact I/O	501	DI 8-point Terminal	Inputs 8 contacts from 8-point Input Unit.	901 to 980
		502	DI 16-point Terminal	Inputs 16 contacts from 16-point Input Unit.	
		503	DI 32-point Terminal	Inputs 32 contacts from 32-point Input Unit.	
		504	DI 64-point Terminal	Inputs 64 contacts from 64-point Input Unit.	
		511	DO 5-point Terminal	Outputs 5 contacts from 5-point Output Unit.	
		512	DO 8-point Terminal	Outputs 8 contacts from 8-point Output Unit.	
		513	DO12-point Terminal	Outputs 12 contacts from 12-point Output Unit.	
		514	DO16-point Terminal	Outputs 16 contacts from 16-point Output Unit.	
		515	DO32-point Terminal	Outputs 32 contacts from 32-point Output Unit.	
		516	DO64-point Terminal	Outputs 64 contacts from 64-point Output Unit.	
		518	DI 16-point/Do16-point Terminal	Inputs and outputs 16 contacts each from 16-point Input/16-point Output Unit.	
		588	Ai4 Terminal (DRT1-AD04)	Inputs 4 analog inputs from a DRT1-AD04 Analog Input Unit (a DeviceNet slave).	
		589	Ao2 Terminal (DRT1-DA02)	Outputs 2 analog outputs from the field outputs on a DRT1-DA04 Analog Output Unit (a DeviceNet slave).	

Category	Type	Block model	Block name	Function	Allocatable block address
Field Terminal	Contact I/O	525	DI 96-point Terminal	Inputs 96 contacts from 96-contact Input Unit.	901 to 980
		537	DO 96-point Terminal	Outputs 96 contacts from 96-contact Output Unit.	
		544	DI 48-point/DO 48-point Terminal	Inputs and outputs 48 contacts each from 48-point Input/48-point Output Units.	
	Analog I/O	551	AI 8-point Terminal (AD003)	Inputs 8 analog signals from the C200H-AD003.	
		552	AO 8-point Terminal (DA003/4)	Inputs 8 analog signals from the C200H-DA003/DA003.	
		553	AI 2-point/AO 2-point Terminal (MAD01)	Inputs and outputs 2 analog signals each from the C200H-MAD01.	
	Analog I/O	561	AI 4-point Terminal (PTS01/02/03,PDC01,PTW01)	Inputs 4 analog signals from one of CS1W-PTS01 (Isolated-type Thermocouple Input Unit), CS1W-PTS02/03 (Isolated-type Temperature-resistance Thermometer Input Unit), CS1W-PDC01 (Isolated-type Analog Input Unit) or CS1W-PTW01 (2-lead Transmitter Input Unit).	
		562	PI 4-point Terminal (PPS01)	Inputs 4 instantaneous values and accumulated values each from CS1W-PPS01 (Isolated-type Pulse Input Unit).	
		563	AO 4-point Terminal (PMV01)	Outputs 4 analog signals from CS1W-PMV01 (Isolated-type Control Output Unit).	
		564	AI 8-point Terminal (PTR01/02)	Inputs 8 analog signals from CS1W-PTR01 (Power Transducer Input Unit) or CS1W-PTR02 (Analog Input Unit (100 mV)).	
		583	AI 4-point/AO 4-point Terminal (MAD44)	Inputs and outputs 4 analog signals each from the CS1W-MAD44.	
		584	AI 8-point Terminal (AD081)	Inputs 8 analog signals from the CS1W-AD081.	
		585	AO 8-point Terminal (DA08V/C)	Outputs 8 analog signals from the CS1W-DA08V/C.	
		586	AI 4-point Terminal (AD041)	Inputs 4 analog signals from the CS1W-AD041.	
		587	AO 4-point Terminal (DA041)	Outputs 4 analog signals from the CS1W-DA041.	

1-2 Configuration of Instrumentation System

1-2-1 Mounting Location

The Loop Control Unit CS1W-LC001 is a CPU Bus Unit for the CS1 Series. Up to three Loop Control Units can be mounted on the CPU Rack for the CS1 Series CPU Unit at any of the positions indicated in the figure below.

Note The Loop Control Unit cannot be mounted on the Expansion Rack for the CS1 Series, the Expansion I/O Rack for the C200H and SYSMAC BUS Remote I/O Slave Rack.

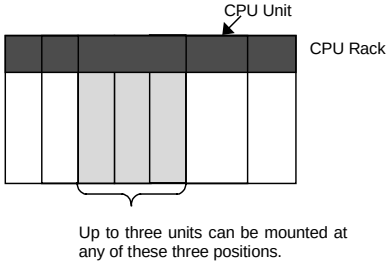

Mountable CPU Unit Models

PC Series	CPU Unit model	Max. number of Units mountable on CPU Rack	Mounting position restrictions
CS1	CS1H-CPU □□ CS1G-CPU □□	Three units (unit No.0 to F)	None

1-2-2 Determining the System Configuration

Check the following points when determining the system configuration:

1, 2, 3… **1. Number of Analog I/O Points Used on Loop Control Unit**

Which analog signals are input/output on the AI/AO terminals of the Field Terminal block, and which analog signals are input/output on the CPU Unit Terminal block or the Expanded CPU Unit Terminal block?

The total number of usable AI/AO terminals on the Field Terminal block combined with the DO/DI terminals is 80. (For details of the unit types that can be used, see page 30.)

The maximum number of usable CPU Unit Terminal blocks is 16. (For details of I/O memory area that can be specified, see page 31.)

2. Number of Contact I/O Points Used on Loop Control Unit

Which contact signals are input/output on the DI/DO terminals of the Field Terminal block, and which contact signals are input/output on the CPU Unit Terminal block or the Expanded CPU Unit Terminal block?

The total number of DI/DO terminals on the Field Terminal block combined with the AO/AI terminals is 80. (For details of the unit types that can be used, see page 33.)

The maximum number of usable CPU Unit Terminal blocks is 16. (For details of I/O memory area that can be specified, see page 33.)

3. Current Consumption

Is the current consumption of the units mounted on the rack less than the current consumption of the Power Supply Unit?

Refer to *CS1-series Operation Manual* (Catalog No. W339-E1*), 2-6 Unit Current Consumption*.

4. Evaluation of Load Rate

The Loop Control Unit cyclically processes operation of its own function blocks asynchronously with I/O refreshing of the CPU Unit. The cycle by which operations are processed, or the "operation cycle," is dependent on the type and number of function blocks used.

For this reason, when many function blocks whose operation takes a long time to process are used, the actual operation cycle of the entire Loop Control Unit or an individual function block increases. As a result, the desired preset operation cycle sometimes cannot be satisfied.

The ratio between the actual execution time required for processing operation and the preset operation cycle is called the "load rate." The maximum values and current value of each operation cycle group can be confirmed on CX-Process Tool.

A load rate of 60% or less is required in all operation cycle groups on this Loop Control Unit.

Note Running of the Loop Control Unit is automatically stopped when the operation cycle of all function blocks is set to two seconds, and the load rate continuously exceeds 70% for ten times. When this happens, processing of the function blocks must be distributed across the Loop Control Units.

Use the following formula as a general guideline for estimating the load rate of the Loop Control Unit at the system design stage.

How to Calculate the Load Rate

Calculate the load rate based upon the following formula.

When all operation cycles are the same operation cycle, the load rate is as shown below. This, however, is to be used only as a guideline.

Formula

Load rate ≅ Sum (ms) of operation execution times of each function block ÷ operation cycle (ms) x 100 + fixed load rate (%)

Note 1 The following table shows the fixed load rates for each operation cycle:

Operation cycle	Fixed load rate
0.1 sec	10%
0.2 sec	5%
0.5 sec	2%
1 sec	1%
2 sec	0%

Note 2 The "sum (ms) of operation execution times of each function block" is a value obtained by discarding values less than 10 ms from the total time obtained by adding the "operation execution time of the function blocks" to the "execution time of the sequence commands."

Note 3 For details on the load rate, see *3-2 Description of Operations*. For details on the operation execution times for each function block and each of the sequence commands in the Step Ladder Program block, see *Appendix-4 List of Operation Execution Times*.

5. Evaluation of External I/O Refresh Cycle (dependent on CPU Unit's cycle time)

The operating speed (operation cycle) itself of each function block on the Loop Control Unit is not related to the CPU Unit's cycle time. However, as the CPU Unit's I/O memory is accessed during data exchange, for example, between Analog I/O Units and the Basic I/O Unit, the timing of data exchange is influenced by the CPU Unit's cycle time.

The external analog I/O refresh cycle (equivalent to the I/O refresh cycle on a general controller) when the Loop Control Unit is configured as part of an instrumentation system is not the same as the operation cycle of the function blocks; but is a cycle heavily dependent on the CPU Unit's cycle time.

In most cases, the maximum external analog I/O refresh cycle is as follows depending on the operation timing:

"approximately 5 times the CPU Unit's cycle time" + "approximately twice the operation cycles of the Loop Control Unit's function blocks"

So, when determining the system configuration, calculate how long the external analog I/O refresh cycle will be within the instrumentation system based upon factors such as the CPU Unit's cycle time and the operation cycles of the Loop Control Unit's function blocks. Also, assess whether or not there will be any problems when running applications at the analog I/O refresh cycle that you have calculated.

(For details on the relationship between the Loop Control Unit's operation cycles and the CPU Unit's cycle time, see *3-2 Description of Operations*. For details on how to calculate the CPU Unit's cycle time, refer to *the CS1-series Operation Manual (W339-E1)*, *15-4 Computing the Cycle Time*.)

1-2-3 Description of Basic System Configuration

Mounting of Units for External Analog I/O and Contact I/O

The Loop Control Unit does not have direct external analog I/O and contact I/O functions. External I/O is achieved via Analog I/O Units and Basic I/O Units mounted on a basic PC System (CPU Rack, Expansion Rack for the CS1, Expansion I/O Rack for the C200H) or on a SYSMAC BUS Remote I/O Slave Rack.

So, in the basic system configuration, Analog I/O Units (Analog Input Unit, Analog Output Unit, and Analog I/O Unit) must be mounted for the same PC.

A Basic I/O Unit must also be mounted for the same PC as necessary.

Input and Output of Analog Data

(1) When exchanging data without specifying the I/O memory address (on Field Terminal block)

The table below shows the Units with which the Loop Control Unit can exchange data regardless of I/O memory address. In data exchange with these Units, use the AI Terminal or AO Terminal blocks on the Field Terminal block that corresponds to the required Unit model as the Loop Control Unit's function blocks.

On the AI Terminal and AO Terminal blocks, set the unit number of the Analog I/O Unit to enable input/output of analog signals.

Unit information	Name	Model	Specification	Function block
C200H Special I/O Unit	Analog Input Unit	C200H-AD003	8 analog inputs	AI 8-point Terminal (Block Model 551)
	Analog Output Unit	C200H-DA003/004	8 analog outputs	AO 8-point Terminal (Block Model 552)
	Analog Input/Output Unit	C200H-MAD01	2 analog inputs/2 analog outputs	AI 2-point/AO 2-point Terminal (Block Model 553)
CS1 Special I/O Unit	Analog Input/Output Unit	CS1W-MAD44	4 analog inputs/4 analog outputs	AI 4-point/AO 4-point Terminal (Block Model 583)
	Analog Input Unit	CS1W-AD081	8 analog inputs	AI 8-point Terminal (Block Model 584)
		CS1W-AD041	4 analog inputs	AI 4-point Terminal (Block Model 586)
	Analog Output Unit	CS1W-DA08V/C	8 analog outputs	AO 8-point Terminal (Block Model 585)
		CS1W-DA041	4 analog outputs	AO 4-point Terminal (Block Model 587)
	Isolated-type Thermocouple Input Unit	CS1W-PTS01	4 thermocouple inputs	AI 4-point Terminal (Block Model 561)
	Isolated-type Temperature-resistance Thermometer Input Unit	CS1W-PTS02/03	4 temperature-resistance thermometer inputs	
	2-lead Transmitter Input Unit	CS1W-PTW01	4 2-lead transmitter inputs	
	Isolated-type Analog Input Unit	CS1W-PDC01	4 analog inputs	
	Isolated-type Pulse Input Unit	CS1W-PPS01	4 pulse inputs	PI 4-point Terminal (Block Model 562)
	Isolated-type Analog Output Unit	CS1W-PMV01	4 analog outputs	AO 4-point Terminal (Block Model 563)
	Power Transducer Input Unit	CS1W-PTR01	8 power transducer inputs	AI 8-point Terminal (Block Model 564)
	Analog Input Unit (100 mV)	CS1W-PTR002	8 analog inputs	

Note 1 In the case of an analog output Field Terminal block, select the function block according to the Unit model.

Note 2 In data exchange above, the Loop Control Unit handles analog I/O signals not in engineering units but in percentage units. For example, the data 0000 to 0F0A (FF38 to 1068) Hex from the Analog Input Unit for input 4 to 20 mA (3.2 to 20.8 mA) are converted to 0.00 to 100.00 (-5.00 to 105.00) % before they are processed by the Loop Control Unit.

These percentage unit values are scaled to engineering units values by CX-Process Monitor.

⚠**WARNING** When the Field Terminal block is used for analog I/O, the unit number set on the Field Terminal block must match the unit number set on the Analog I/O Unit front panel. Otherwise, input/output (read/write) operations will be performed by mistake on the data of another Special I/O Unit (having the unit number set on the field terminals).

(2) When exchanging data with a specified I/O memory address (on CPU Unit Terminal block or the Expanded CPU Unit Terminal block)

When the Loop Control Unit exchanges analog data with a specified I/O memory address, use the AI Terminal from CPU Unit and AO Terminal to CPU Unit blocks on the CPU Unit Terminal block or the Expanded AI Terminal from CPU Unit and Expanded AO Terminal to CPU Unit on the Expanded CPU Unit Terminal block.

In this instance, the Loop Control Unit can exchange data with any type of unit as long as the data is allocated to the I/O memory addresses indicated in the following table. (For example, data on analog terminals allocated to the CompoBus/D Area can also be exchanged.)

The following table shows I/O memory that can be specified on CPU Unit Terminals or the Expanded AI Terminal from CPU Unit or Expanded AO Terminal from CPU Unit in the Extended CPU Unit block:

Area type	I/O memory address of CS1 CPU Unit	Remarks
CIO (channel I/O) Area	0000 to 6143 words	Including I/O Area, CompoBus/D Area, Data Link Area, and Special I/O Unit Area (*1)
Work Area (W)	W000 to 511 words	
Holding Area (H)	H000 to 511 words	
Data Memory (D)	D00000 to 32767 (words)	Including Special I/O Unit Area in Data Memory Area
Extended Data Memory (E) bank No.0	E0_00000 to E0_32767	

The following CPU Unit Terminal function blocks or the Expanded CPU Unit Terminal block are used:

Number of points		Function block
Input	8 words	AI Terminal from CPU Unit (Block Model 453)
	64 words	Expanded AI Terminal from CPU Unit (Block Model 457)
Output	8 words	AO Terminal to CPU Unit (Block Model 454)
	64 words	Expanded AO Terminal from CPU Unit (Block Model 458)

Note 1 In addition to the above number of points, the CPU Unit Terminal block differs from the Expanded CPU Unit block as follows:

With the CPU Unit Terminal block, analog output to another function block must go via the Variable ITEM Setting block (Block Model 172). Whereas, with the Expanded CPU Unit Terminal block, analog output can be output directly without going via the Variable ITEM Setting block (Block Model 172).

Also, with the CPU Unit Terminal block, analog input/output to and from another function block is possible from only either "analog input" or "analog output" type ITEMs. Whereas, with the Extended CPU Unit Terminal block, input/output is also possible from all ITEMs (mainly parameter ITEMs) that can be written by the Variable ITEM Setting block (Block Model 172) in addition to the above ITEMs for the CPU Unit Terminal block.

Note 2

- In data exchange above, the AI Terminal from CPU Unit block or Expanded AI Terminal from CPU Unit treats data in the words as decimal data, and specifies which values are to be converted to 0% and 100% values for any specified range. For example, when the range 0 to 4000 (0000 to 0FA0 Hex) is specified for input from the CPU Unit, the AI Terminal from CPU Unit block converts the values of 0000 to 0FA0 Hex in I/O memory words to 0.00 to 100.00% before inputting them to the Loop Control Unit. Alternatively, the AO Terminal to CPU Unit block or AO Terminal to Expanded CPU Unit can specify the target conversion values (decimal) at 0% and 100%. When the range 0 to 4000 (0000 to 0FA0 Hex) is specified for output to the CPU Unit, the AO Terminal to CPU Unit block converts the values of 0.00 to 100.00% to 0000 to 0FA0 Hex before outputting them to the I/O memory words.

  These percentage unit values are scaled to engineering units values by CX-Process Monitor.

- When the CPU Unit Terminals or the Expanded CPU Unit Terminals are used to exchange Analog I/O Unit allocated CIO converted values and setting values, data exchange functionally differs with data exchange using the Field Terminal blocks as follows:

Item		When field terminal blocks are used	When CPU Unit Terminals or the Expanded CPU Unit Terminal block are used
Address specification		The I/O memory address need not be specified. (Set only the unit number.)	I/O memory address must be specified.
Range conversion		At which values (for example, 0000 to 0FA0 Hex) the 0 to 100% values are stored to the allocated area by the Analog I/O Unit need not be set as the "range." (This, however, is required on isolated-type Analog I/O Units.)	At which values (for example, 0000 to 0FA0 Hex) the 0 to 100% values are stored to the allocated area by the Analog I/O Unit must be set as the "range."
Value of allocated relay area	Analog input	The 1st word of the allocated relay area is forcibly set by the Loop Control Unit. As a result, the peak hold function is disabled.	Regular use
	Analog output	The 1st word of the allocated relay area is forcibly set by the Loop Control Unit. As a result, the Analog Output Conversion Enable flag is always "1" (output after conversion ON). When the mode is changed to the PROGRAM mode, the hold output function does not work.	Regular use When the mode is changed to the PROGRAM mode, the hold output function works when the Analog Output Conversion Enable flag turns OFF.

Input and Output of Contacts

(1) When exchanging data without specifying the address on I/O memory (on Field Terminal block)

The Loop Control Unit can exchange contacts (bit data) with the Basic I/O Unit or the Contact I/O Unit of the Special I/O Unit. In data exchange with these units, use the DI Terminal and DO Terminal blocks on the Field Terminal block having the corresponding number of contact I/O points.

On the DI Terminal and DO Terminal blocks, set the leading allocated address of the Contact I/O Unit for performing contact I/O operations.

Unit	I/O	Number of points	Function block
Contact Input Unit	I	8	DI 8-point Terminal (Block Model 501)
		16	DI 16-point Terminal (Block Model 502)
	I	32	DI 32-point Terminal (Block Model 503)
		64	DI 64-point Terminal (Block Model 504)
Contact Output Unit	O	5	DO 5-point Terminal (Block Model 511)
		8	DO 8-point Terminal (Block Model 512)
		12	DO 12-point Terminal (Block Model 513)
		16	DO 16-point Terminal (Block Model 514)
		32	DO 32-point Terminal (Block Model 515)
		64	DO 64-point Terminal (Block Model 516)
Contact I/O Unit	I/O	16/16	DI 16-point/DO 16-point Terminal (Block Model 518)

Note In the case of a contact I/O Field Terminal block, select the function block not according to Unit model but according to the number of contact I/O points.

(2) When exchanging data with a specified address on I/O memory (on CPU Unit Terminal block or the Expanded CPU Unit Terminal block)

When the Loop Control Unit exchanges contacts (bit data) with a specified I/O memory address, use the DI Terminal from CPU Unit and DO Terminal to CPU Unit blocks on the CPU Unit Terminal block or the Expanded AI Terminal from CPU Unit or Expanded AO Terminal from CPU Unit in the Expanded CPU Unit block.

In this instance, the Loop Control Unit can exchange data with any type of unit as long as the data is allocated to the I/O memory addresses indicated in the following table. (For example, data on analog terminals allocated to the CompoBus/D Area can also be exchanged.)

The following table shows I/O memory that can be specified on CPU Unit Terminals or the Expanded CPU Unit Terminal:

Area type	I/O memory address of CS1 CPU Unit	Remarks
CIO (channel I/O) Area	0000 to 6143 words	Including I/O Area, CompoBus/D Area, Data Link Area, and Special I/O Unit Area, (*1)
Work Area (W)	W000 to 511 words	
Holding Area (H)	H000 to 511 words	
Data Memory (D)	D00000 to 32767 (words)	Including Special I/O Unit Area in Data Memory Area
Extended Data Memory (E) bank No.0	E0_00000 to E0_32767	

The following CPU Unit Terminal function blocks are used:

Number of points		Function block
Input	128 contacts	DI Terminal from CPU Unit (Block Model 451)
	64 contacts	DI Terminal from Expanded CPU Unit (Block Model 455)
Output	128 contacts	DO Terminal to CPU Unit (Block Model 452)
	64 contacts	DO Terminal from Expanded CPU Unit (Block Model 456)

Note 1 In addition to the above number of points, the CPU Unit Terminal block differs from the Expanded CPU Unit block as follows.

With the CPU Unit Terminal block, contact input/output to another function block must go via the Contact Distributor block (Block Model 201) or the Step Ladder Program block (Block Model 301). Whereas, with the Extended CPU Unit Terminal block, contact input/output is possible without going via the Contact Distributor block (Block Model 201) or the Step Ladder Program block (Block Model 301).

Note 2 When the CPU Unit Terminals are used to exchange data with the Contact I/O Unit allocated CIO Area, data exchange functionally is the same as when the Field Terminal blocks are used to perform data exchange.

Note 3 Do not write to the same I/O memory addresses when exchanging data between the Loop Control Unit and the CPU Unit.

Connecting to CX-Process Tool

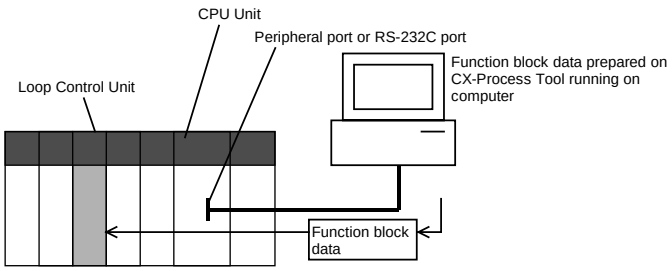

The Loop Control Unit achieves all functions by combining function blocks. Function block data must be prepared on CX-Process Tool and then downloaded to the Loop Control Unit for use.

The tag settings for CX-Process Monitor must also be prepared on CX-Process Tool.

CX-Process Tool runs on a computer that is connected to the peripheral port or RS-232C port of the CPU Unit. (The Host Link can be used in the serial communications mode but not on the Peripheral bus.)

CX-Process Tool is installed on a computer on which the Controller Link Support Board is mounted, and function block data can be downloaded from CX-Process Tool to the Loop Control Unit via the Controller Link.

Connecting to CX-Process Monitor

The Loop Control Unit itself does not have a man-machine interface. So, it must be connected to CX-Process Monitor to monitor the run status of each function block.

To use CX-Process Monitor to monitor the function block data (all ITEMs) on the Loop Control Unit, analog signals (including parameters), and contact signals (including parameters), the data to be monitored must be specified by the Send to Computer block (Block Models 401 to 404). CX-Process Tool must then be used to specify tags (No./name) to each of the function block data (all ITEMs), analog signals, and contact signals.

CX-Process Monitor is used for monitoring and changing the settings of the tags preset on CX-Process Tool.

Note 1 The following data can be monitored and set or manipulated on CX-Process Monitor:

- Data (ITEM to which tag ITEMs are allocated in advance in the Control block) of the function block specified as the source designation on the 1-Block Send Terminal to Computer block (Block Model 403). (This data can be registered to the Tuning screen.)
- Data (ITEM to which tag ITEMs are allocated in advance in the Control block or Operation block) of the function block specified as the source designation on the 4-Block Send Terminal to Computer block (Block Model 404). (This data, however, cannot be registered to the Tuning screen.)
- Analog input signals (including parameters) specified as the source designation on the AO to Computer block (Block Model 402) or the AO Terminal to All Nodes block (Block Model 408)
- Analog input signals (including parameters) specified as the source designation on the DO to Computer block (Block Model 401) or the DO Terminal to All Nodes block (Block Model 407)
- Analog output signals received on the AO Terminal Settings from Computer block (Block Model 410)
- Contact output signals received on the DO Terminal Settings from Computer block (Block Model 409)

Note 2 CX-Process Monitor identifies all data by "tags."

So, before you start to use CX-Process Monitor, it is essential that "tags" are set to each Function block or ITEM that is to be monitored or manipulated (Function block or ITEM that is specified as the source designation on the above function blocks). These "tags" are preset on CX-Process Tool for use by CX-Process Monitor.

Transferring Data to and from SCADA Software

The following methods can be used to read and write Loop Control Unit data with commercially available SCADA software.

Read and Writing Block ITEMs Transferred by Receive All Blocks and Send All Blocks

Reading Data

The Send All Blocks function block (model 462) is used to transfer specific ITEMs in Control Blocks, Operation Blocks, and External Controller Blocks to the specified words in I/O memory in the CPU Unit. SCADA software is then used to read the data from the I/O memory of the CPU Unit.

Writing Data

SCADA software is used to write data to words in the I/O memory of the CPU Unit. The Receive All Blocks function block (model 461) is then used to transfer specific ITEMs in Control Blocks, Operation Blocks, and External Controller Blocks from the specified words in I/O memory to the Loop Control Unit.

Read and Writing Block ITEMs Note Transferred by Receive All Blocks and Send All Blocks

Reading Data

The Expanded DO Terminal from CPU Unit or Expanded AO Terminal from CPU Unit function block is used to transfer the specified ITEMs in to specified words in I/O memory in the CPU Unit. SCADA software is then used to read the data from the I/O memory of the CPU Unit.

Writing Data

SCADA software is used to write data to words in the I/O memory of the CPU Unit. The Expanded DI Terminal from CPU Unit or Expanded AI Terminal to CPU Unit function block is then used to transfer the specified ITEMs from the specified words in I/O memory to the Loop Control Unit.

1-3 Specifications

1-3-1 General Specifications

These specifications conform to the general specifications of the SYSMAC CS1 Series.

1-3-2 Specifications

Item		Specification
Product name		Loop Control Unit
Unit model		**CS1W-LC001**
Applicable PC		CS1 Series
Unit classification		CS1 CPU Bus Unit
Mounting location		Unrestricted as long as units are mounted on the CPU Rack
Number of mountable Units		3 units max.
Unit number		0 to F (duplicate setting in CPU Bus Unit not allowed)
Data exchange method with CPU Unit	Allocated Words in CIO Area for CPU Bus Unit	Loop Control Unit → CPU Unit: Operation status, PV error input ON, MV error input ON, occurrence of execution error, function block database error, battery error
	Allocated Words in DM Area for CPU Bus Unit	Not used
	Data Memory for Node Terminals	Min. 8 words and max. 3836 words used as the Data Memory (D) Area The system information of each leading 8 words on the Loop Control Unit (roles 0 to 2) are reflected in the CX-Process Monitor. Leading addresses can be specified within the range D00000 to D32767 (set in the System Common block). The default leading address is D16020.
Setup		Front panel: Rotary switch: Unit number (0 to F)
Display		5 LEDs: In RUN mode, CPU Unit error, Unit error
Front panel interface		RS-232C port x 1 (Used for connection to ES100X Controller.)
Battery backup data		All function block data (including Step Ladder Program commands), stored error log data
Battery service life		5 years at 25°C (life shortened by use at higher temperatures)
Data stored in flash ROM		Function block data
Backup from RAM to flash memory		Executed from CX-Process Tool (as required)
Recovery from flash memory to RAM		Executed automatically at PC startup (if pin 2 on DIP switch is ON) or executed from CX-Process Tool (as required)
Influence on CPU Unit's cycle time		0.2 ms
Current consumption (supplied from Power Supply Unit)		360 mA at 5 V DC
External dimensions (mm)		34.5 (W) x 130 (H) x 100.5 (D)
Weight		220 g max.
Standard accessories		Battery C200H-BAT09

1-3-3 Function Specifications

Item			Description		
Operation method			Function block method		
Number of function blocks			Total: Max. 727 blocks		
			Analog operation	Control Blocks	PID and other control functions	Max. 32 blocks
				Operation Blocks	Alarm, square root operation, time operations, pulse train operation, and other operation functions for various processes	Max. 250 blocks
				External Controller Block	Monitoring and setting functions for external controllers	Max. 32 blocks
			Step Ladder Program block		Logic sequence and step sequence functions	Max. 4000 commands Max. 100 commands/1 block Can be divided into max. 100 steps Max. 100 commands/1 step
			I/Ot block	Field Terminal block	Analog I/O function with Analog I/O Unit, contact I/O function with Basic I/O Unit	Max. 80 blocks
				CPU Unit Terminal block	Analog data I/O and contact I/O functions with CPU Unit	Max. 16 blocks
				Expanded CPU Unit Terminal block	Analog data I/O and contact I/O functions with CPU Unit (direct I/O with other function block possible)	Max. 32 blocks
				Send/Receive All Blocks blocks	Allocating words in the CPU Unit for data transfer with standard SCADA	Max. 2 blocks
				Node Terminal block	Send to computer	Max. 32 blocks
					Send to networked PC	Max. 50 blocks
					Receive from networked PC	Max. 100 blocks
			System Common block		System common operation cycle setting, run/stop command, load rate monitor, etc.	Single block
Function block data preparation/download			Function block data prepared by CX-Process Tool (sold separately) and downloaded to Loop Control Unit			
Execution of function blocks	Function block execution conditions	Common to all function blocks	- Operation of all function blocks by turning power ON to the PC (Hot or cold start can be specified.) - Function block operation can be stopped by CX-Process Monitor, CX-Process Tool, or FINS command. - Hot start (state active before unit was stopped is continued before operation is started) or cold start (all state signals and function block internally held values are cleared before operation is started) is possible by CX-Process Monitor, CX-Process Tool or FINS command.			
		For individual function block	- Function block operation can be stopped and hot start (state active before Unit was stopped is continued before operation is started) is possible by CX-Process Monitor, CX-Process Tool or FINS command.			
	Function block operation cycle		Standard: Operation of all function blocks is executed at the same operation cycle preset to ITEM 004 in the System Common block. Settable operation cycles: 0.1 s, 0.2 s, 0.5 s, 1 s, 2 s (default: 1 s) Option: Operation of individual function blocks is executed at the same operation cycle preset to ITEM 004 in the System Common block. Settable operation cycles: 0.1 s, 0.2 s, 0.5 s, 1 s, 2 s (default: 1 s) Note 1: Note, however, that the external I/O refresh cycle on a single control loop does not match this operation cycle. This refresh cycle is heavily dependent on the CPU Unit's cycle time. (See the external I/O refresh cycle item below.) Note 2: In the case of the Field Terminal, CPU Unit Terminal, Expanded CPU Unit Terminal and Node Terminal function blocks for exchanging data with the CPU Unit, a cycle time approximately 3.3 times or more of the CPU Unit's cycle time is required in most cases.			

Item		Description	
Execu-tion of function blocks	Load rate	The "load rate" refers to the ratio between the actually applied execution time and preset operation cycle. The maximum value and current value are displayed for each operation cycle group on the CX-Process Tool. A load rate of 60% or less is required in all operation cycle groups. When the load rate continuously exceeds 70% for ten times, the load rate automatically changes to the next longer operation cycle. (This is called the "automatic operation cycle switching function.") Note: Operation of the Loop Control Unit is automatically stopped when the operation cycle of all function blocks is set to two seconds, and the load rate continuously exceeds 70% for ten times.	
External I/O refresh cycle		The time from external input of analog signals up to external output of analog signals on a single control loop depends on the function block's operation cycle and the CPU Unit's cycle time. Generally, the external I/O refresh cycle is obtained by adding "approximately 1 to 5 times the CPU Unit's cycle time" to "approximately 1 to 3 times the operation cycles of the Loop Control Unit's function blocks." (For a detailed description of how to calculate the external I/O refresh cycle, see *3-2 Description of Operations*.)	
Internal Operation	Number of control loops	Max. 32 loops (Max. 32 ON/OFF control, Basic PID blocks and Advanced PID blocks and other control blocks can be used simultaneously.) Note: The maximum number of control loops is restricted by the operation cycle. In most cases (when there is no Step Ladder Program), the maximum number of control loops is 32 loops at operation cycles of 2, 1 and 0.5 seconds; 16 loops at an operation cycle of 0.2 seconds; and 8 loops at an operation cycle of 0.1 seconds.	
	Number of operations for process (excluding control)	Max. 250 blocks	
	Sequence control	Max. 100 blocks per unit and total max. 4000 commands per unit Divisable to max. 100 commands per block and max. 100 steps per block (max. 100 commands per step)	
Control method	PID control	PID with two degrees of freedom	
	Possible control type combinations	Basic PID control, cascade control, feedforward control, sample PI control, dead time compensation, PID control with differential gap, override control, program control, time-proportional control and other control types can be achieved by combining function blocks.	
Alarm	Integrated into PID block	4 PV alarms (high/high limit, high limit, low limit, low/low limit) per PID block, 1 deviation alarm	
	Alarm block	High/Low Alarm block, Deviation Alarm block	
Internal analog signal		Min. -320.00% to max. +320.00% Scaling of the engineering units depends on the CX-Process Tool (sold separately). Monitoring/setting by engineering units depends on CX-Process Monitor (sold separately).	
Operating status monitor method		Executed by CX-Process Monitor (sold separately)	
External I/O	External I/O signals	By data exchange with Analog I/O Unit via the Field Terminal block	Total number of I/O points: (max. 8 points on Analog Input Unit or Analog Output Unit, or max. 96 points on Basic I/O Unit) x 80 blocks
	External contact I/O signals	By data exchange with Basic I/O Unit via the Field Terminal block	
	CPU Unit analog data I/O	By data exchange with CPU Unit I/O memory via the CPU Unit Terminal Block	Total number of I/O points: (8 words or 128 contacts on CPU Unit) x 16 blocks
	CPU Unit contact data I/O	By data exchange with CPU Unit I/O memory via the CPU Unit Terminal Block	
	CPU Unit analog data I/O	By data exchange with CPU Unit I/O memory via the Expanded CPU Unit Terminal Block (direct I/O with other function blocks, and I/O of parameter ITEMs on other function blocks possible)	Total number of I/O points: (64 words or 64 contacts on CPU Unit) x 32 blocks
	CPU Unit contact data I/O	By data exchange with CPU Unit I/O memory via the Expanded CPU Unit Terminal Block (direct I/O with other function blocks possible)	
	Analog/contact I/O with SCADA software	Data transfer between Loop Control Unit and I/O memory in CPU Unit for Control, Operation, and External Controller blocks using Send/Receive All Blocks.	Total number of I/O points: 313 blocks max. x 20 words/block = 6,280 words allocated in CPU

Item		Description		
External I/O	I/O via CPU Unit	By data exchange with computer or networked Loop Control Unit via the Node Terminal block Note: The Controller Link Data Link must be used.	Send to computer: 128 contacts, 16 words Send to computer: 1 block, 4 blocks Receive from computer: 32 contacts, 2 words Send to other node PC: 32 contacts, 2 words Receive from other node PC: 32 contacts, 2 words	
	FINS command to Loop Control Unit	Read/write of ITEMs in Loop Control Unit function blocks and execution of run/stop commands are possible from the CPU Unit (including other networked nodes) or host computer by issuing the following FINS commands to the Loop Control Unit. - READ MULTIPLE ITEMS IN FUNCTION BLOCK (0240 HEX) - WRITE MULTIPLE ITEMS IN FUNCTION BLOCK (0241 HEX) - READ ITEM IN MULTIPLE FUNCTION BLOCKS (0242 HEX) - WRITE ITEM IN MULTIPLE FUNCTION BLOCKS (0243 HEX) - READ UNIT INFORMATION (0501 HEX) - ECHOBACK TEST (0801 HEX) - READ ERROR LOG (2102 HEX) - CLEAR ERROR LOG (2103 HEX)		
Allocated area	Data memory for communications I/O	A Data Memory area comprising continuous 3836 words is used as communications I/O area common to the Loop Control Units (3 units) on the PC.		
		System error information	8 words x 3 units = 24 words	Unit address, Loop Control Unit run status, CPU Unit run status, data update check code
		Area to send to computer	16 words x 32 blocks = 512 words	Data send area to the host computer on which the CX-Process Monitor is running
		Area to send to all nodes	2 words x 50 blocks = 100 words	Data send area to all nodes (PCs or computers) on Controller Link
		Area to receive from all nodes	2 words x 50 blocks x 32 nodes = 3200 words	Data receive area from all nodes (PCs or computers) on Controller Link
System common status signals	Status output signal for sequence control	Constantly ON flags, constantly OFF flags, clock pulse (ON/OFF every 0.5 and 1 seconds)		
	Clock timing output signal	Differential output at 00:00 every day, noon every day, every 10 minutes, every minute and every 10 seconds Note: The CPU Unit's clock data are read as these clock data.		
	Calendar/clock output signal	Year, year/month, month/hour, day/time, hour/minute and minute/second Note: The CPU Unit's clock data is read as these clock data.		
Error display		By front panel LED: unit number setting error, hardware test error, function block database error, battery error Storage of function block execution-related error codes to ITEM 003 of each function block: source/destination designation error, illegal function block combination, illegal parameter, etc.		

1-3-4 Outline of PID Block Specifications

This item mainly describes an outline of the PID block specifications.

In the Basic PID block (Block Model 011) and Advanced PID block (Block Model 012), the functions are set to ON and OFF. For actual details on each ITEM setting, see the descriptions for each block.

○: supported, ✕: not supported

Item		Description	Basic PID	Advan-ced PID
PV (Process Variable) Input	Number of points	1	○	○
	Input Range	-15.00 to +115.00%		
	Operation function	None (Calculation of square root, first-order lag, bias, etc. is required by external blocks.)		
	Sampling cycle	According to the specified operation cycle of this block (one of 0.1, 0.2. 0.5, 1, 2 seconds or 1 to 128 seconds)		
	PV error input	When the PV error contact turns ON, the Loop Control Unit is forced to enter the Manual mode, and the MV value active at that moment is held. At the same time, the PV error is transferred to the CX-Process Monitor.		
SP (Set Point)	Number of points	1	○	○
	Setting range	-15.00 to +115.00%		
	Remote/Local switching	Possible		
	SP rate-of-change limitter	Possible (0 to 115.00%/s)	✕	○
	PV tracking	Match the SP (Set Point) to the PV (Process Variable) if the Loop Control Unit is in the Local and Manual modes when PV tracking is set to ON.	○	○
	Bumpless processing between primary/secondary loops	When the self node is performing cascade control as the secondary controller, processing is performed on the MV of the primary controller to be input.		
Deviation	PV compensation	Arithmetic operation (addition, subtraction, substitution) is performed on the PV signals to be input to the PID control section when the PV compensation input switch is ON.	✕	○
PID Control	Control method	Advanced PID (Various PID methods (proportional priority type, PV differential priority type, deviation differential type, etc.) can be selected according to the settings of parameters α and β.)	○	○
	Control action	Direct/reverse switchable		
	PID constant	1 set Automatic setting (AT: auto-tuning) by the limit cycle mode is possible.		
		Proportional band: 0.1 to 999.9% (0.1% increments)		
		Integral time: 0 to 9999 s. (1 second increments) 0: No accumulator Integral stop can be indicated from external contacts. Differential time: 0 to 9999 s. 0: No differentiation		
	Manual reset	-320.00 to 320.00 (0.01% increments)	✕	○
MV (Manipulated Variable)	Number of points	1 set	○	○
	Output range	-320.00 to +320.00%		
	Output refresh cycle	According to the specified operation cycle of this block (one of 0.1, 0.2. 0.5, 1, 2 seconds)		
	Auto/manual switching	Possible (according to CX-Process Monitor, CX-Process Tool or contact signal from Step Ladder Program block/Contact Distributor block)		
	High/low MV limit	High limit: -320.00 to +320.00%, low limit: -320.00 to +320.00%		

Item		Description	Basic PID	Advan-ced PID
MV (Manipulated Variable)	MV high rate-of-change limit	0 to 115.00%/s	×	○
	Preset MV switching	When the preset MV switch is set to ON, the MV switches to the preset MV (fixed value) and control is continued at this value.		
	MV hold	The MV (Manipulated Variable) is held at the current value when the MV hold switch is ON.	×	○
	MV tracking	The MV is switched (tracks) to the input value from other blocks.		
	MV compensation	Arithmetic operation (addition, subtraction, substitution) is performed on the MV signals from the PID control section when the MV compensation input switch is ON.		
	Out-of-range processing at MV output destination block	PID accumulator is stopped when the range is exceeded on the function block to which MV is connected.	○	○
	MV error input	MV error is transferred to CX-Process Monitor when the MV error contact turns ON.		
Alarm	PV alarm	4 (high/high limit, high limit, low limit, low/low limit), setting range: each -15.00 to +115.00% Hysteresis: 0 to +115.00%		
	Deviation alarm	1 (ON outside deviation)		
State Output		1 current Set Point output (-15.00 to +115.00%), 1 deviation output (-115.00 to +115.00%)		

1-3-5 Software Specifications

The following software (sold separately) is required to use the Loop Control Unit:

- CX-Process Tool: Tool for preparing function block data (essential)
- CX-Process Monitor: Tool for monitoring/setting the Loop Control Unit (This software is not required when using SCADA and other third-party software.)

CX-Process Tool Specifications

Item		Specification
Product name		CX-Process
Model		WS02-LCTC1
Applicable PC-series		CS1 Series
Applicable Unit		Loop Control Unit
Applicable computer	Computer	PC AT or compatible
	CPU	Min. required: Pentium 133 MHz or faster, Recommended: Pentium MMX166 MHz or faster
	OS	Microsoft Windows NT4.0 Service Pack 4 or later, Windows 95, 98, Me, or 2000 (See note.) Note: Microsoft Windows NT4.0 is required for preparing tag data to be used by the CX-Process Monitor. This data cannot be prepared on Windows 95/98.
	Memory	Min. required: 32 Mbytes, Recommended: 64 Mbytes or more
	Hard disk space	Min. required: 20 Mbytes of free space, Recommended: 30 Mbytes or more of free space
	Monitor	Min. required: SVGA, Recommended: XGA or higher
	CD-ROM drive	At least one
	Mouse	Recommended: Microsoft mouse or compatible pointing device
Connecting method	Connection with CPU Unit (or Serial Communications Board/Unit)	Using the FinsGateway SerialUnit Driver Communications protocol with PC: Host Link (not supported on Peripheral bus) The computer is connected to the CPU Unit peripheral port or built-in RS-232C port, or RS-232C port of the Serial Communications Unit/Board. - Connector cable: When connecting to the CPU Unit peripheral ports: Model CS1W-CN □□□ (2 m, 6 m) When connecting to the CPU Unit's RS-232C port: Model XW2Z-□□□-□ (2 m, 5 m) (For details on model numbers, see *2-3 Connecting to CX-Process Tool and CX-Process Monitor*.)
		Using the CX-Server Communications protocol with PC: Host Link or peripheral bus
	Connection via Controller Link	Using the FinsGateway CLK (PCI) Driver The Driver is installed on the computer on which the PCI Controller Link Support Board is mounted to enable communications with the PC on which the Controller Link Unit is mounted.
		Using the FinsGateway Controller Link Driver or the CX-Server The Driver is installed on the computer on which the ISA Controller Link Support Board is mounted to enable communications with the PC on which the Controller Link Unit is mounted.
	Connection via Ethernet	Using the FinsGateway ETH_UNIT Driver or the CX-Server The Driver is installed on the computer on which the Ethernet Board is mounted to enable communications with the PC on which the Ethernet Unit is mounted.
Offline operation functions		- Setting of function block ITEM data (including System Common block settings) - Software wiring of analog signals - Pasting, displaying, and printing text-string comments (memos) in block or ladder diagrams. - Description of Step Ladder Program block commands - Setting of tags for CX-Process Monitor (on block designated as the source in the Send to Computer block, contacts and analog signals) - Initialization of Loop Control Unit memory (RAM)

Item	Specification
Online operation functions	- Downloading of function block data (download/upload to and from Loop Control Unit) - Run/stop command for Loop Control Unit (all function blocks) - System monitor run status: Monitoring/manipulation of System Common block (Block Model 000) (including monitoring of load rate of function blocks in each operation cycle group) - Loop Control Unit monitor run status: Confirmation of function block wiring operation (including operation stop/stop cancel on each function block), confirmation of Step Ladder Program operation - Autotuning PID constants and other parameters.

Note: Windows 95 does not support access via a PCI Control Link Support Board. A Pentium 150-MHz processor or better is recommended for Windows Me.

CX-Process Monitor Specifications

Item		Descriptions	
Product name		CX-Process	
Model		WS02-LCTC1	
Applicable PC-series		CS1 Series	
Applicable Unit		Loop Control Unit	
Applicable computer	Personal computer	PC AT or compatible	
	CPU	Min. required: Pentium 133 MHz or faster, Recommended: Pentium MMX233 MHz or faster	
	OS	Microsoft Windows NT4.0 Service Pack 4 or later or Windows 2000 (Windows 95/98 cannot be used.)	
	Memory	Min. required: 64 Mbytes, Recommended: 96 Mbytes or more	
	Hard disk drive	Min. required: 150 Mbytes of free space, Recommended: 200 Mbytes or more of free space	
	Monitor	Min. required: XGA, Recommended: XGA or higher, min. 1024 x 768 dots, 256 colors	
	CD-ROM drive	At least one	
	Mouse	Recommended: Microsoft mouse or compatible pointing device	
	Sound board	1 pce.	
Connecting method	Connection with CPU Unit (or Serial Communications Board/Unit)	When FinsGateway SerialUnit version is used.	The computer is connected to the CPU Unit peripheral ports or integrated RS-232C port, or RS-232C port of the Serial Communications Unit. (Only a 1:1 connection is possible.) - Connector cable: When connecting to the CPU Unit peripheral ports: Model CS1W-CN □□□ (2 m, 6 m) When connecting to the CPU Unit's RS-232C port: Model XW2Z-□□□-□ (2 m, 5 m) (For details on model numbers, see *2-3 Connecting to CX-Process Tool and CX-Process Monitor*. - Communications protocol with PC: Host Link (not supported on Peripheral bus)
	Connection via Controller Link	When FinsGateway Controller Link version is used.	The FinsGateway Controller Link version is installed on the computer on which the Controller Link Support Board is mounted to enable communications with the PC on which the Controller Link Unit is mounted.
Loop Control Unit data specification method		Function blocks, analog signals and contact signals (including parameters) that are designated as the source by the Send to Computer blocks (Block Models 401 to 404) are appended a tag number by the CX-Process Tool. Specify this tag number to specify the Loop Control Unit data. When reading from the Loop Control Unit: Use the terminal to computer send area in the Data Memory for the node terminals on the CPU Unit. When performing operations on the Loop Control Unit: Write to the function blocks that are specified as the source designation in the Send to Computer block without using the terminal to computer send area. Note: Microsoft Windows NT4.0 is required for preparing tag data to be used by the CX-Process Monitor. This data cannot be prepared on Windows 95/98.	
Data exchange method with CPU Unit mounted on Loop Control Unit		Mode name	Description	Connection method
		On-demand read mode:	CX-Process Monitor reads the data in the terminal to computer send area whenever necessary.	One of Host Link, Ethernet or Controller Link
		Data Link mode:	CX-Process Monitor reads the terminal to computer send area at all times by the Controller Link data link.	Only Controller Link is possible

Item			Specification		
Offline operation functions			Prepare the user configuration screen for use in the online operation screen.		
Online operation functions	User Configuration screen	Overview screen	Place buttons for progressing to the Control screen, Trend screen and other screens. 4 columns and 8 lines are displayed on each screen (max. 12 screens).		
		Control screen	Control blocks such as the PID blocks and Indication blocks, and some Operation blocks are displayed for up to 8 loops in a single screen in the form of a field device. The maximum number of screens is 400. This screen displays the Set Point, PV and MV numeric values, displays PV as a bar graph, and can be used for changing Set Point, MAN and other setting values. The color of bar graphs changes when an alarm occurs. You can progress to the Tuning screen from the Control screen.		
		Tuning screen	This screen is for setting P, I, D parameters in Control blocks such as the PID blocks, and for setting alarm setting values. PV, Set Point and MV can be tuned while their trends are monitored. The maximum number of screens is 3200. Run stop/stop cancellation are possible on each function block. Note: Only the Control block that is designated as the source at the 1-Block Send Terminal to Computer block can be registered.		
		Trend screen	The analog signals (analog values such as the Control block Set Point, PV and MV, and other analog values) input from the terminals to the computer are collected at a fixed cycle and saved to a file. If necessary, up to 8 analog signals can be displayed on one screen in the form of a multi-dot recorder.		
			Data collected (logger function)	Real time trend	12 hour's of data is saved at 10-second cycles appended with up to 160 tags.
				Historic trend	10 day's of data is saved at 1-minute cycles appended with up to 320 tags.
				Batch trend	10-day's of data is saved at 1-minute cycles appended with up to 320 tags when the Trend Start signal is ON.
			Data display	Horizontal (time) axis: 2, 4, 8, 12 and 24 hour time units can be scrolled Vertical (8-point common) axis: Graduation can be enlarged by a factor or 1, 2, 5 and 10. Data is displayed from the time when the specified display start time is reached. Display color: red, yellow, green, blue, magenta, purple, cyan, white	
		Graphic screen	This screen displays changes in the plant status using graphic elements representing plant devices pasted to the screen from the graphic elements library (provided with the CX-Process Monitor). The maximum number of screens is 200. Fixed graphic elements provided in library: Devices, thermometers, transmitters, orifices, text Variable graphic elements provided in library: Analog input: Bar graph display, numeric indication, tanks Analog output: Numeric setting (by AO Terminal Settings from Computer block) Contact input: Pumps, valves, indicators Contact output: Switches (by DO Terminal Settings from Computer block)		
		Annunciator screen	This screen notifies the operator of alarms or errors that occur by changing the display color and emitting sound. At the same time, a 32-character message is displayed over two lines on screen elements. A total of 16 screen elements (4 columns x 4 lines) can be displayed on each screen. The maximum number of screens is 5.		
		Operation Guide/Message screen	This screen displays pre-registered 128-character messages over two lines together with the date of occurrence when the specified internal switch is set to ON. Max. number of registerable messages: 100, Number of display colors: 7 Up to 1000 messages are displayed in a single screen.		
		System Monitor screen	This screen displays the Loop Control Unit operation run/stop commands, operation start/stop status, execution errors, RAM sum errors, battery errors, and the status of the Controller Link Data Link.		

Item			Specification
Online operation functions	System Fixed screen	Alarm Log screen	A record of alarms (time of error occurrence, tag name, PV or MV current value at occurrence, alarm type, etc.) that occur and that are input from the Control and Alarm blocks is saved and displayed as a list later. Up to 1000 alarm messages are displayed in a single screen.
		Operation Log screen	A record of changes (date and time of change, tag name, original ITEM data setting, new ITEM data setting, etc.) made to ITEM data on the Loop Control Unit in the Control or Tuning screen is saved and displayed as a list later. Up to 1000 operation messages are displayed in a single screen.
		System Monitor Log screen	This screen displays a log of the run/stop history and a history of execution errors that occur on the Loop Control Unit together with the date of occurrence.

1-4 How to Use Function Blocks for Specific Operations

To perform this specific operation		Perform the following	See page:
Data Exchange	Direct exchange of large amounts of data between the CPU Unit and function blocks for data exchange with a PT (Programmable Terminal) for example	Use the Expanded CPU Unit Terminal Blocks (Block Models 455 to 458).	*Function Block Reference Manual*
	Continuous data exchange with the CPU Unit	Use the CPU Unit Terminal blocks (Block Models 451 to 454).	*3-3 Exchanging Data with the CPU Unit*
	Read/write of specified data (ITEMs) from a CPU Unit (including a CPU Unit on a networked PC) whenever necessary	Execute the CMND (DELIVER COMMAND) instruction in the Step Ladder Program, and issue the FINS command (ITEM read/write command).	
	Continuous data exchange with a Loop Control Unit at another node	Use Controller Link and the Node Terminal blocks (Send Terminal to All Nodes, Receive Terminal from All Nodes), and execute the Controller Link Data Link (at any setting).	*3-4 Exchanging Data with CX-Process Monitor/SCADA Software and with Other Nodes* *Appendix-2 How to Use the Node Terminal Block*
	Continuous monitoring and manipulation of all ITEM data in multiple Control blocks (max. 4 blocks) on CX-Process Monitor	Use the Node Terminal blocks (4-Block Send Terminal to Computer or 1-Block Send Terminal to Computer).	*3-4 Exchanging Data with CX-Process Monitorr/SCADA Software and with Other Nodes* *Appendix-2 How to Use the Node Terminal Block*
	Reading/writing specific ITEMs for Control, Operation, and External Controller Blocks with SCADA software	Using Receive All Blocks (Block Model 461) and Send All Blocks (Block Model 462) to transfer Loop Control Unit data using tags created with CX-Process Tool.	*3-4 Exchanging Data with CX-Process Monitorr/SCADA Software and with Other Nodes*
Run/ Stop	Instruction of run start/stop of the Loop Control Unit (all function blocks) from the CPU Unit whenever necessary	Execute the CMND (DELIVER COMMAND) instruction in the Step Ladder Program, and issue the FINS command (ITEM read/write command) to change ITEM 014 (run/stop command) of the System Common block. Or, use the ITEM setting commands (Block Models 171 and 172) to stop ITEM 014 (run/stop command) of the System Common block. (In this case, operation cannot be started.) Note: Operation can also be stopped or started on CX-Process Tool and CX-Process Monitor.	*3-2 Description of Operation* (page 84)
	Instruction of operation stop/stop cancellation on individual function blocks from the CPU Unit whenever necessary	Execute the CMND (DELIVER COMMAND) instruction in the Step Ladder Program, and issue the FINS command (ITEM read/write command) to change ITEM 000 (stop block operation command) of the relevant block. Note: Arithmetic operation stop/stop cancel on a relevant block can also be indicated by monitoring the run status on CX-Process Tool.	
	Execution of required processing on the CPU Unit according to run status (e.g. in RUN mode, execution error, function block data error) of the Loop Control Unit	Execute the required processing on the CPU Unit taking bits 00 to 05 of the nth leading words of the CPU Bus Unit as the input conditions.	*3-3 Exchanging Data with the CPU Unit*
	Execution of required processing on the Loop Control Unit according to run status (e.g. operation mode, fatal error, Output OFF) of the CPU Unit	Execute the required processing on the Loop Control Unit using the Step Ladder Program block based upon the CPU Unit run status of ITEMs 007 to 011 and 013 in the System Common block.	
High-speed processing	High-speed processing of specific function blocks	Set the operation cycle of the relevant function block to a shorter value.	*3-2 Description of Operatio* (page 84)

To perform this specific operation		Perform the following	See page:
High-density monitor	High-density monitoring of analog signals	Monitor analog signals by the Field Terminal blocks (Block Models 501 to 587) and Send to Computer blocks (Block Models 401 to 404)	*3-4 Exchanging Data with CX-Process Monitor and with Other Nodes Appendix-2 How to Use the Node Terminal Block*
Monitoring/ Setting External Controllers	Monitoring and setting a stand-alone external controller.	Connect an ES100X Controller to the RS-232C port on the Loop Control Unit and use the ES100X Controller Terminal (Block Model 045).	*Function Block Reference Manual*
Batch Data Collection	Data collection by a certain timing within sequence processing in a batch processing plant	Use the Batch Data Collector block (Block Model 174)	*Function Block Reference Manual*
Analog control	ON/OFF control	Use the 2-position ON/OFF block (Block Model 001).	*Function Block Reference Manual*
	Heating/cooling ON/OFF control	Use the 3-position ON/OFF block (Block Model 002).	
	Time-proportional control	Use the Analog/Pulse Width Converter block (Block Model 192).	*5-1 Basic Examples of PID Control* (page 152) and *Function Block Reference Manual*
	Application of input filter on PV	Use the First-order Lag block (Block Model 141).	*Function Block Reference Manual*
	Application of bias on PV	Use the Ratio Setting block (Block Model 033) or the Addition/Subtraction block (mode 121).	
	Application of ratio on Set Point and PV		
	Entry of differential pressure transmitter to calculate flowrate	Use the Square Root block (Block Model 131) (with low-end cutout function).	
	Entry of pulse output flowmeter for accumulation of flowrate	Use the Pulse Input Unit, and enter to the Accumulator for accumulated value input block (Block Model 184) for continuous accumulation.	*5-1 Basic Examples of PID Control* (page 152) and *Function Block Reference Manual*
	Temperature and pressure correction	Use the Temperature and Pressure Correction block (Block Model 136).	*Function Block Reference Manual*
	Setting of the PID constant values for multiple words	Use the Constant Item Setting block (Block Model 171).	*5-1 Basic Examples of PID Control* (page 152) and *Function Block Reference Manual*
	Switching of multiple Set Point values	Use the Constant Selector block (Block Model 165) or the Constant Item Setting block (Block Model 171).	*5-1 Basic Examples of PID Control* (page 152) and *Function Block Reference Manual*
	Switching of multiple PID sets	Use the Constant Item Setting block (Block Model 171).	*5-1 Basic Examples of PID Control* (page 152) and Function Block Reference Manual
	Ramp control of Set Point values (program control)	Use the Ramp Program block (Block Model 155) or the Segment Program block (Block Model 156).	*5-1 Basic Examples of PID Control* (page 152) and *Function Block Reference Manual*
	Cascade control	Use a serial connection for the Basic PID block (Block Model 011) or Advanced PID block (Block Model 012).	*5-2 Examples of Applied Control Types* (page 161) and *Function Block Reference Manual*
	Dead time compensation control	Use the Dead Time Compensation block (Block Model 149) or the Advanced PID block (Block Model 012).	*5-2 Examples of Applied Control Types* (page 161) and *Function Block Reference Manual*
	Feedforward control	Use the Advanced PID block (Block Model 012) or the Lead/Delay block (Block Model 147).	*5-2 Examples of Applied Control Types* (page 161) and *Function Block Reference Manual*
	Non-interfering control		

To perform this specific operation		Perform the following	See page:
Analog control	Sample PI control	Use the ON/OFF Timer block (Block Model 206).	*5-2 Examples of Applied Control Types* (page 161) and *Function Block Reference Manual*
	PID control with differential gap	Use the Constant Item Setting block (Block Model 171).	*Function Block Reference Manual*
	Selective control	Use the Rank Selector block (Block Model 161).	
	Using fuzzy control based on knowledge from ambiguous expressions	Use the Fuzzy Logic block (Block Model 016).	
Special math operations	Performing calculation is engineering units rather than percentages	Use the Arithmetic Operation block (Block Model 126).	
	Performing special calculations, such as trigonometric or logrithmic operation		
	Calculating statistics (e,g., average, standard deviation, etc) for time sequence data	Use the Time Sequence Data Statistics block (Block Model 153).	
Accumulation processing	Accumulation (accumulator) of instantaneous analog signals such as flowrate signals on the Loop Control Unit	Use the Accumulator for instantaneous value input block (Block Model 150).	*5-1 Basic Examples of PID Control* (page 152) and *Function Block Reference Manual*
	Continuous accumulation of 4-digit accumulated value signals (repeat signals 0000 to 9999) and conversion to 8-digit signals	Use the Accumulator for accumulated value input block (Block Model 184).	*Function Block Reference Manual*
	Input and accumulation of low-speed pulse signals such as the power signal	Use the Contact input/Accumulated value output block (Block Model 185).	
	Notification of accumulated values on a field mechanical counter for contact inputs	Use the Accumulated Value Input/Contact Output block (Block Model 186).	*Function Block Reference Manual*
	Batch flowrate capture	Use the Batch Flowrate Capture block (Block Model 014).	
	Ratio control of accumulated values	Use the Batch Flowrate Capture block (Block Model 014) and the Blended PID block (Block Model 013).	
	Addition of accumulated values	Use the Accumulated Value Input Adder block (Block Model 182)	
	Multiplication of analog signals with accumulated values	Use the Accumulated Value Analog Multiplier block (Block Model 183)	
Sequence control	AND, OR and other logical operations on the Loop Control Unit	Use the Step Ladder Program block (Block Model 301). Use the Internal Switch block (Block Model 209).	*Appendix-1 How to Use the Step Ladder Program Block* and *Function Block Reference Manual*
	One-shot contact output of the ON input state when the contact state changes from OFF to ON and vice versa only in 1-operation cycles (system common operation cycle)		
	Constantly ON contacts and other system contacts		
	Step progression control and other control on the Loop Control Unit		
	Acceptance of relays in the Step Ladder Program		
	Execution of special processing at each fixed cycle longer than operation cycle in Step Ladder Program	Generate a fixed cycle timing signal by the Clock Pulse block (Block Model 207).	
	Execution of timers/counters on the Loop Control Unit	Use the Timer block (Block Model 205) and the Counter block (Block Model 208).	*Function Block Reference Manual*
	Changing PID constants and other parameters in stages according to a process value (e.g., temperature).	Use the Level Check block (Block Model 210) and the Constant ITEM Setting block (Block Model 171) together to change paramters for other blocks according to the level.	

To perform this specific operation		Perform the following	See page:
Constant setting/selec-tion	Constant transmission of constants as analog signals	Use the Constant Generator block (Block Model 166).	
	Setting of constants to specified ITEMs under certain conditions	Use the Constant Item Setting block (Block Model 171).	*3-1 Configuration of Function Blocks* and *Function Block Reference Manual*
	Selection of one of multiple constants and transmission of that constant as an analog signal	Use the Constant Selector block (Block Model 165).	*Function Block Reference Manual*
Analog signal setting/ selection	Setting of analog signals to specified ITEMs under certain conditions	Use the Variable ITEM Setting block (Block Model 171).	*3-1 Configuration of Function Blocks* and *Function Block Reference Manual*
	Selection of one of multiple analog signals and transmission of that analog signal as an analog signal	Use the Input Selector block (Block Model 162).	*Function Block Reference Manual*
Analog signal setting/ selection	Selection of the maximum value from multiple analog signals and transmission of that maximum value as an analog signal	Use the Rank Selector block (Block Model 161).	*Function Block Reference Manual*
	Selection of the minimum value from multiple analog signals and transmission of that minimum value as an analog signal		
	Selection of the nth largest value from multiple analog signals and transmission of the signal as an analog signal		
	Switching of sensors on a different measuring system or measurement target	Use the 3-input Selector block (Block Model 163).	
	Switching of operation nodes on a different measuring system or measurement target	Use the 3-output Selector block (Block Model 164).	
	Changing two settings with a ramp (e.g., opening and closing valves)	Use the Ramped Switch block (Model Block 167).	
	Converting ranges of analog signals merely by setting values for 0% and 100% inputs and 0% and 100% outputs	Use the Range Conversion block (Block Model 127).	
Analog signal/ constant comparison	Comparison of constant and analog signals	Use the Constant Comparator block (Block Model 202)	
	Comparison of two analog signals	Use the Variable Comparator block (Block Model 203)	
Manipulation/ monitor/ control of special external control target	Manipulation and monitoring of ON/OFF valve with open/close limit switches	Use the ON/OFF Valve Manipulator block (Block Model 221)	
	Manipulation and monitoring of motors	Use the Motor Manipulator block (Block Model 222)	
	Manipulation and monitoring of reversible motors	Use the Reversible Motor Manipulator block (Block Model 223)	
	Manipulation of a electric positional-proportional motor as the control target	Use the Basic PID (Block Model 011)/ Advanced PID block (Block Model 012) and Motor Opening Manipulator block (Block Model 224)	

1-5 Basic Procedure for Using the Loop Control Unit

This section describes the basic procedure for using the Loop Control Unit.

For examples of actual procedures, see *Section 4 Simple Examples of Use*.

1. Design

1) Prepare an instrumentation drawing.

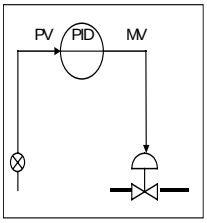

See this Section (for understanding which functions can be used on the Loop Control Unit).

See *Section 5 Examples of Function Block Combinations*.

2) Decide on the PC system configuration.

This mainly involves selection of the Analog Input and Output Units.

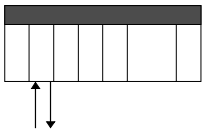

See *1-2 Configuration of Instrumentation System*.

See *Section 3 Mechanism of the Loop Control Unit*.

3) Select the required function blocks.

See *1-4 How to Use Function Blocks for Specific Operations*.

See *Section 3 Mechanism of the Loop Control Unit*.

4) Decide on the function block system configuration.

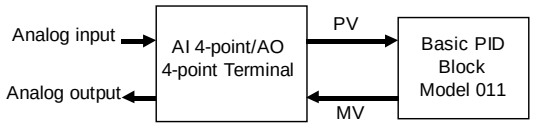

See *Section 5 Examples of Function Block Combinations*.

Refer to the *Function Block Reference Manual*.

5) Decide on the data to be monitored and manipulated by CX-Process Monitor.

Refer to the *CX-Process Monitor Operation Manual*.

6) Assess the load rate and the external I/O refresh cycle.

See *1-2 Configuration of Instrumentation System*.

See *3-2 Description of Operation*.

7) Assess fail-safe countermeasures.

See *3-5 Fail-safe Countermeasure Guidelines*.

2. Preparing Function Block Data (by CX-Process Tool)

1) Set up and start CX-Process Tool.

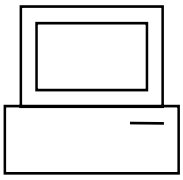

Prepare the function block data on CX-Process Tool running on the computer.

Refer to *CX-Process Tool Operation Manual*.

2) Set the System Common block data.

(For example, set the operation cycle and leading Data Memory address for the Node Terminals.)

Refer to the *Function Block Reference Manual*.

3) In CX-Process Tool, wire the analog signals between the Selector blocks (analog signals and accumulated value signals only).

Refer to the *CX-Process Tool Operation Manual*.

4) Set the ITEMs in each function block.

(If necessary, program step ladder commands in the Step Ladder Program block including contact signals.)

Refer to *CX-Process Tool Operation Manual*.

Refer to the *Function Block Reference Manual*.

Note Set function block initial setting parameters (refer to the item "(S): Initial setting data" describing how to read/write in the *Function Block Reference Manual*) on CX-Process Tool.

5) Using CX-Process Monitor

Set the Terminals to Personal Computer for CX-Process Monitor.

Set the monitor tags for CX-Process Monitor and create the monitor tag files.

Refer to the *CX-Process Monitor Operation Manual*.

OR

5) Using SCADA Software

Set the Send All Blocks, Receive All Blocks, or Expanded CPU Unit Terminal blocks.

Set the CSV tags and create the CSV tag files.

Refer to the *CX-Process Monitor Operation Manual*.

3. Setting up the Loop Control Unit

1) Mount the Loop Control Unit and wire the Analog Input and Output Units.

The Loop Control Unit itself need not be wired.

See *2-2 Installation* and refer to the manual for other *Analog Input and Output Units*.

2) Set the unit number setting switch on the front panel of the Loop Control Unit.

See *2-1 Names and Functions of Parts*.

Refer to the *Analog Input and Output Unit Manuals*.

3) Connect the Programming Devices.

Refer to *Programming Devices (CX-Programmer or Programming Console) Operation Manual*.

4) Turn power ON to the PC.

5) Create I/O tables using the Programming Devices.

Refer to the *Programming Devices (CX-Programmer or Programming Console) Operation Manual*.

6) If necessary, set the communications conditions of the serial communications port in the PC Setup using the Programming Devices.

   Refer to the *Programming Devices (CX-Programmer or Programming Console) Operation Manual*.

7) Set the allocated Data Memory (D) on the Analog Input and Output Units using the Programming Devices.

   Refer to the *Analog Input and Output Unit* manuals.

4. Downloading the function block data to the Loop Control Unit

1) Turn power OFF to the PC.

2) Set the unit number setting switch on the front panel of the CPU Unit.

   Refer to the *CS1 PC Operation Manual*.

3) Connect the CPU Unit to the computer on which CX-Process Tool is running.

4) Turn the PC ON.

5) Set the network address (000), node address (01) and unit address (unit number + 10 Hex in decimal).

   Refer to the *CX-Process Tool Operation Manual*.

6) Perform the Host Link connection operation on CX-Process Tool ([File]-[Initialize Serial Port]).

   Refer to the *CX-Process Tool Operation Manual*.

7) Download the function block data to the Loop Control Unit specified in the Function Block Data Sheet of CX-Process Tool ([Execute]-[Download]).

   Refer to the *CX-Process Tool Operation Manual*.

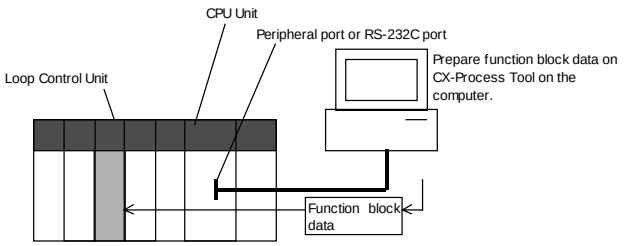

Note Check the following points before you start Loop Control Unit operation.

(1) The correct combination of Analog I/O Units must be mounted.

(2) The unit address on the front of the Analog I/O Units must match the unit number set on the Field Terminal block. Otherwise, input/output (read/write) operations will be performed by mistake on the data of another Special I/O Unit (having the unit number set on the Field Terminal block).

(3) The correct defaults of the System Common block on the Loop Control Unit must be set. In particular, make sure that same applications as those for other PCs are not set for the Data Memory (D) for the Node Terminals on the CPU Unit to be used by the Loop Control Unit.

8) Execute the run/stop command on CX-Process Tool ([Execute]-[Operation]-[Monitor run status]) or turn the PC power OFF then back ON again.

   Refer to *CX-Process Tool Operation Manual*.

9) Check the LEDs on the front panel of the Loop Control Unit (RUN LED lit, ERC LED out).

   See *7-1 Errors and Alarm Troubleshooting*.

5. Trial Operation

1) Execute the run/stop command on CX-Process Tool ([Execute]-[Operation]-[Monitor run status]) or turn the PC power OFF then back ON again.

   See *3-2 Description of Operations*.

   Refer to *CX-Process Tool Operation Manual*.

2) Monitor the run status on CX-Process Tool ([Execute]-[Operation]-[Monitor run status]).

   Execute the load rate check and other diagnostic checks.

   Refer to the *CX-Process Tool Operation Manual*.

Note To disable inadvertent generation of analog signals when running of the Loop Control Unit is started merely for checking the load rate, disconnect the analog output connections.

3) Check the wiring on CX-Process Tool ([Validate action]-[Start]).

   Refer to the *CX-Process Tool Operation Manual*.

4) Set up and start CX-Process Monitor.

   Refer to *CX-Process Monitor Operation Manual*.

5) Set the Set Point and other settings on CX-Process Monitor.

   Refer to the *CX-Process Monitor Operation Manual*.

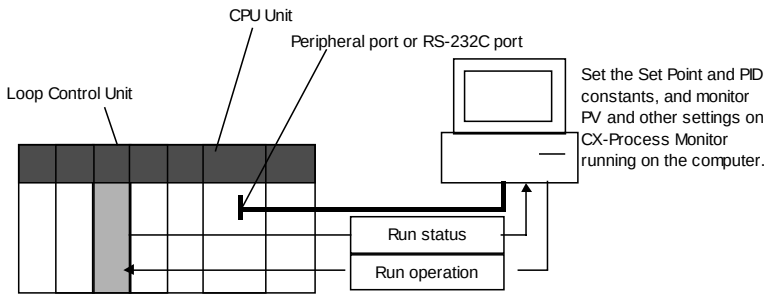

6. Actual Operation

1) Tune the Loop Control Unit using the CX-Process Monitor. (For example, change the settings and PID constants.)

   Refer to the *CX-Process Monitor Operation Manual*.

2) Monitor PV and alarms on CX-Process Monitor.

   Refer to the *CX-Process Monitor Operation Manual*.

SECTION 2
Components, Installation and Wiring

2-1 NAMES AND FUNCTIONS OF PARTS 60

2-1-1 Names and Functions of Parts 60

2-2 INSTALLATION 64

2-2-1 Mountable Units 64

2-2-2 Mounting Procedure 64

2-2-3 Handling the Analog Input/Output Unit 65

2-3 CONNECTING TO CX-PROCESS TOOL AND CX-PROCESS MONITOR 66

2-3-1 Connecting by Host Link 66

2-3-2 Connecting by the Controller Link Support Board 67

2-1 Names and Functions of Parts

2-1-1 Names and Functions of Parts

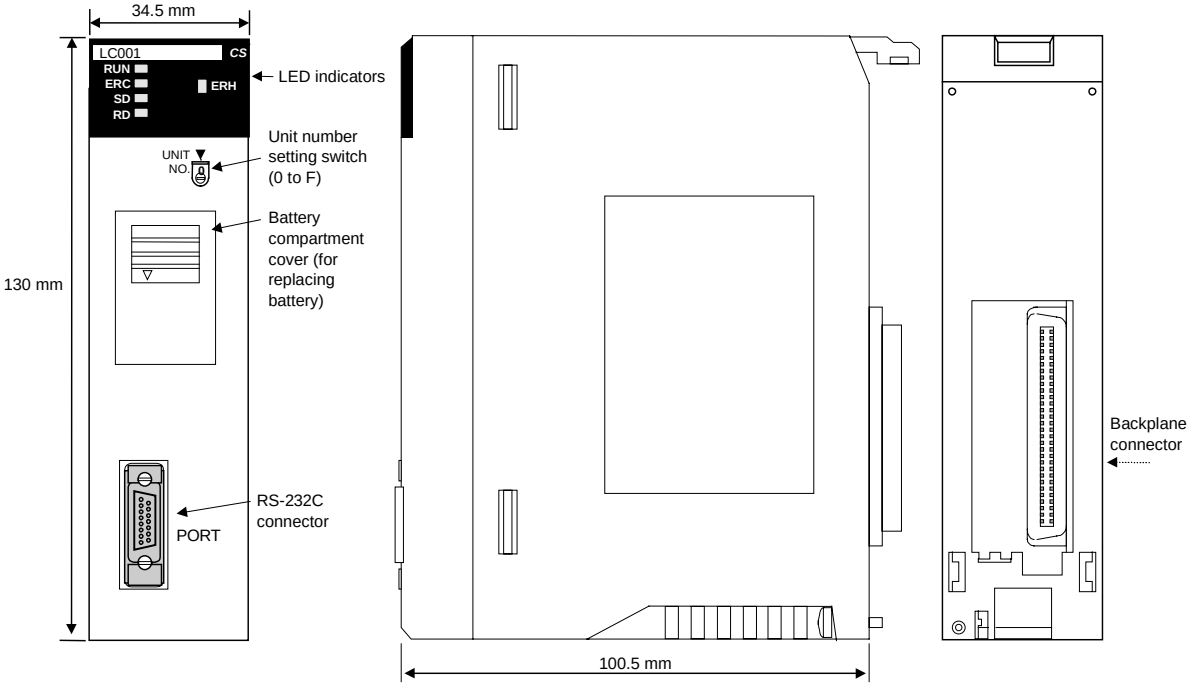

Unit number setting switch:

Sets the unit number (0 to F) of the Loop Control Unit. Set the unit number of the Loop Control Unit so that it is not the same as that of other CS1 CPU Bus Units.

Note The unit address (unit number + 10 Hex) is automatically stored to ITEM041 of the System Common block at the start of CPU Unit running based upon the unit number set on the unit number setting switch. At the same time, the same unit address value is automatically stored to the leading address of each LCU number in Data Memory for the Node Terminals.

RS-232C port:

Used to connect to an ES100X Controller. Using the port is enabled by creating an ES100X Controller Terminal block (Block Model 045).

LED Indicators

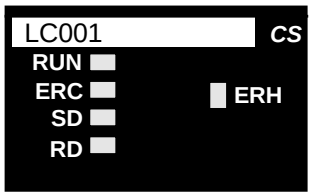

Indication	Name	Color	State	Description
RUN	CPU Unit running	Green	Out	• System stopped A probable cause is one of the following: • Initialization of unit in progress • Unit hardware trouble • No power supply from power supply unit • Unit WDT error • Operation of Loop Control Unit stopped (A probable cause is one of the following:) - Regular operation stopped - CPU Unit operation stop error - CPU Unit in standby mode - Load rate exceeded at operation cycle of 2 s (Operation Cycle Automatic Switching Generation flag ON)
			Lit	• Loop Control Unit running
ERH	CPU Unit error	Red	Out	• No CPU Unit error
			Lit	• CPU Unit error
ERC	Loop Control Unit error	Red	Out	No error
			Lit	Error
			Blinking	Battery error (only when pin 2 of DIP switch is OFF)
SD	Not used	—	—	—
RD	Not used	—	—	—

Battery

When the battery compartment cover is opened, you can access the battery mounted as shown below.

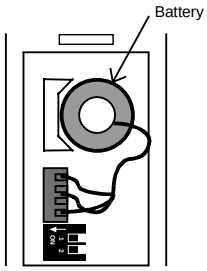

The battery is used for backing up the following data in the Loop Control Unit:

- Function block data
- Error log data

If pin 2 of the DIP switch is OFF and the battery voltage drops or a battery is not mounted, the ERC LED on the front panel blinks. At the same time, bit 05 of the leading n words of the allocated relay area and ITEM095 of the System Common block (Block Model 000) become 1 (ON), and the error log code (0330 for battery error and 0331 for function block database error) is stored on the Loop Control Unit.

Note If pin 2 of the DIP switch is ON, flash memory contents will be automatically transferred to RAM at startup, bit 5 of word n will be ON, and ITEM 095 of the

System Common block will be ON. (Battery errors (error code 0330) will not be stored in the error log.)

When replacing the battery, replace with the following battery type. For details on how to replace the battery, see *7-2 Maintenance*.

Product name	Model
Battery set	C200H-BAT09

Note Operation without a battery is also possibly by setting the Loop Control Unit to automatically transfer the contents of flash memory to RAM at startup. Refer to *7-2 Maintenance* for details.

DIP Switch

When the battery compartment cover is opened, you can access the DIP switch shown below.

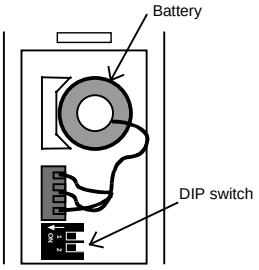

Pin 2 of the DIP switch is used to specify whether or not flash memory contents will be automatically transferred to RAM at startup. Any changes to the setting of the DIP switch are effective when PC power is turned ON or the Loop Control Unit is reset. Changes made during operation will be ignored.

Note Always turn OFF the power supply to the Loop Control Unit before changing the settings on the DIP switch.

Appearance	Pin	Setting	Meaning	Application
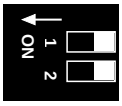	1	ON	Do not turn ON.	—
		OFF (default)		
	2	ON (See note 1.)	Contents of flash memory transferred to RAM at startup.	Turn ON to operate without a battery. Turn ON to recover RAM contents from flash memory for a battery error when functiion block data has been backed up to flash memory and a battery error has occurred.
		OFF (default)	Contents of flash memory not transferred to RAM at startup.	Used to operate with RAM backed up by the battery.

Note 1 The Loop Control Unit will operate as follows when pin 2 of the DIP switch has been turned ON to automatically transfer flash memory contents to RAM at startup:
When the power to the PC is turned ON or the Loop Control Unit is restarted, the function block data will be transferred from flash memory to RAM before operation is started. Operation, however, must be started using a cold start. Operation will not start for a hot start.
If operation is then stopped from the CX-Process Tool, either a hot or cold start can be used as normal.
When pin 2 is ON, the ERC indicator on the front panel will not flash and bit 05 of word n will not turn ON even if the battery voltage drops or a battery is not mounted.

Note 2 Before turning ON pin 2 on the DIP switch, transfer the function block data to the flash memory using the CX-Process Tool. If the function block data is not stored in flash memory, RAM data will be overwritten and deleted at startup.

2-2 Installation

2-2-1 Mountable Units

The Loop Control Unit is mounted on the CPU Rack for the CS1 series.

Only the three adjacent slots on the CPU Unit can be used as the mounting location.

Note The Loop Control Unit cannot be mounted on the I/O Expansion Rack for the C200H and the SYSBUS Remote I/O Slave Rack.

2-2-2 Mounting Procedure

Follow the procedure below to mount the Loop Control Unit on the Backplane.

1, 2, 3… 1. Lock the top of the Loop Control Unit onto the Backplane by the hook and rotate the Loop Control Unit downwards as shown in the figure.

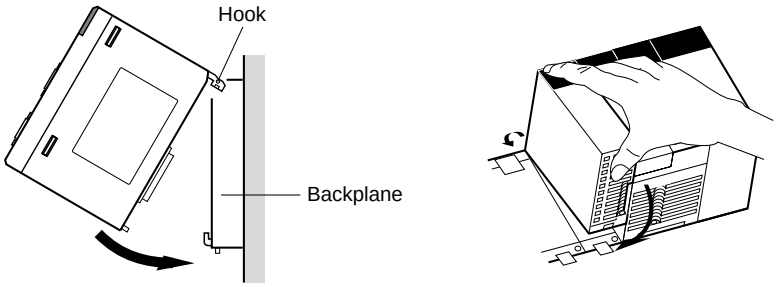

2. Correctly slot the connector of the Loop Control Unit into the connector on the Backplane.

3. Tighten the mounting screw on the bottom side using a Phillips screwdriver. During this operation, the Phillips screwdriver must be held at a slight angle, so leave enough space below each Rack for mounting and removing the Units.

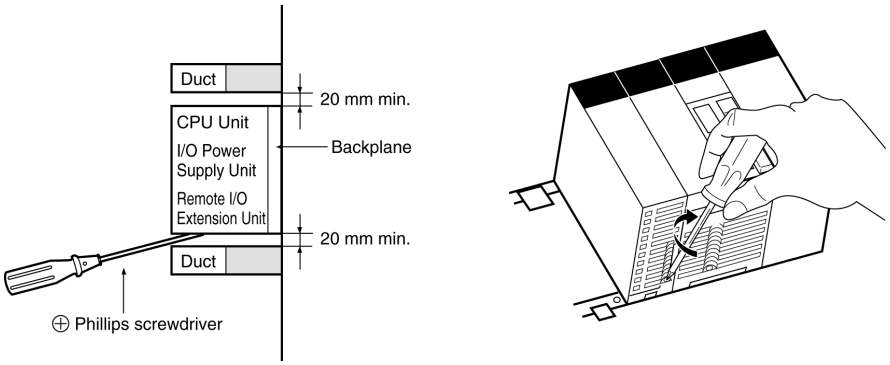

Note Be sure to tighten the mounting screw on the bottom side securely to the tightening torque of 0.4 N•m.

To remove the Loop Control Unit, loosen the screw at the bottom side using the Phillips screwdriver, and lift up the bottom side to remove.

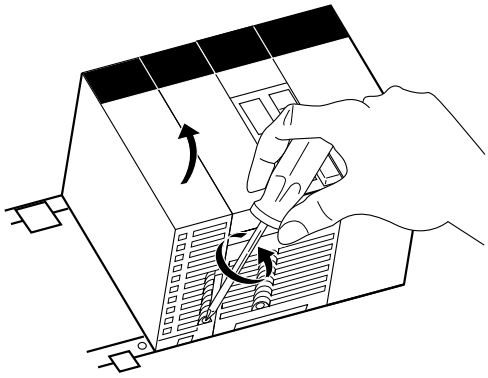

Precaution When Handling the Loop Control Unit

- Be sure to turn OFF the power to the PC before installing or removing the Loop Control Unit.

2-2-3 Handling the Analog Input/Output Unit

Note The Loop Control Unit is used in combination with an Analog Input/Output Unit. Note the following points when handling the Analog Input/Output Unit:

- Before starting running of the Loop Control Unit, make sure that the Analog Input/Output Unit is correctly mounted on the same PC Unit. Even if running of the Loop Control Unit is started without the Analog Input/Output Unit mounted on the same PC Unit, warning messages to this effect are not displayed on the screens of CX-Process Tool and CX-Process Monitor.
- The unit number set on the front panel of the Analog Input/Output Unit must be set to the same as the unit number specified in the Field Terminal block. If unit numbers should differ, reading and writing will be performed erroneously on another Special I/O Unit having the unit number specified in the Field Terminal block.

2-3 Connecting to CX-Process Tool and CX-Process Monitor

There are two ways of connecting CX-Process Tool and CX-Process Monitor to the PC (Programmable Controller): connecting by Host Link and connecting by the Controller Link Support Board.

Note CX-Process Tool and CX-Process Monitor cannot be connected directly to the Loop Control Unit.

In either connection, use FinsGateway as the communications driver.

Communications network	Fins Gateway to be used	Description
Host Link	SerialUnit version	Connection to PC peripheral or RS-232C port (only Host Link connection supported)
Controller Link network	Controller Link version	Connection via Controller Link Support Board to a PC to which a Controller Link Unit is mounted
Ethernet network	Ethernet version	Connection via an Ethernet port to a PC to which an Ethernet Unit is mounted

2-3-1 Connecting by Host Link

Use the Fins Gateway Serial Unit version to connect to the peripheral port of the PC or RS-232C port over the Host Link.

Connect the computer to the RS-232C port of the CPU Unit's peripheral port or to the RS-232C port of the Serial Communications Board/Unit. Note that the computer cannot be connected to the RS-232C port of the Loop Control Unit.

- Connecting to the peripheral port of the CPU Unit

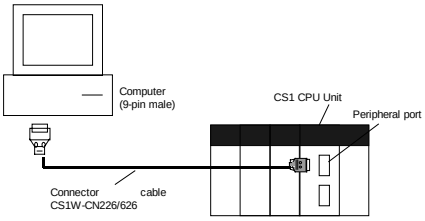

- Connecting to the RS-232C port of the CPU Unit or Serial Communications Board/Unit

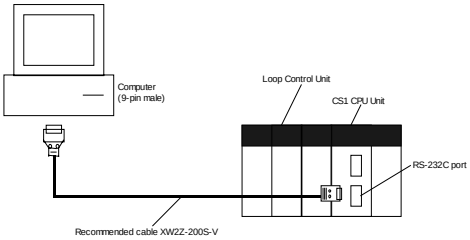

Note 1
- In either of the above connections, the serial communications mode is possible only on the Host Link (SYSMAC WAY), and cannot be connected by the peripheral bus.
- If the Fins Gateway Serial Unit version is not installed, connection by the Host Link (SYSMAC WAY) is not supported. (The Fins Gateway Serial Unit version is packed together with CX-Process Tool.)

  Even if the CX-Programmer is installed on the computer, connection by the Host Link (SYSMAC WAY) is not supported.

The following table shows the connector cables used for connecting to the computer on which CX-Process Tool is running and to the PC (CPU Unit or Serial Communications Board/Unit).

Connection port	Serial communications mode	Computer	Length	Model
Connection to CPU Unit peripheral port	Host Link mode	PC AT or compatible	0.1 m	CS1W-CN118 (Note 2)
			2.0 m	CS1W-CN226
			6.0 m	CS1W-CN626
Connection to CPU Unit or RS-232C port of Serial Communications Board/Unit	Host Link mode	PC AT or compatible	2.0 m	XW2Z-200S-V
			5.0 m	XW2Z-500S-V

Note 2 The CS1W-CN118 conversion cable is used when the RS-232C cable is connected to the peripheral port of the CPU Unit.

Note 3 Before connecting to the CPU Unit, be sure to set the DIP switch on the front panel of the CPU Unit.

Connection via peripheral port: Set DIP switch SW4 to ON and set the PC system setting to Host Link.

Connection via RS-232C port: Set DIP switch SW5 to OFF.

2-3-2 Connecting by the Controller Link Support Board

Use the FinsGateway Controller Link version to connect to the PC over the Controller Link network.

Note If the FinsGateway Controller Link version is not installed, connection by the Controller Link is not supported. (The FinsGateway SerialUnit version is packed together with CX-Process Tool.)

- **Controller Link Units**

Model	Mountable PC	Unit classification	Type	Hardware connection
CS1W-CLK21	CS1	CPU Bus Unit	Wired	Twisted-pair
CS1W-CLK12			Optical ring (H-PCF cable)	H-PCF optical fiber cable
CS1W-CLK52			Optical ring (GI cable)	GI optical fiber cable

- **Controller Link Support Boards**

Model	Transmission medium	Applicable computer
3G8F7-CLK12	Optical ring (H-PCF cable)	PC/AT or compatible computer with a PCI bus
3G8F7-CLK52	Optical ring (GI cable)	
3G8F7-CLK21	Wired	
3G8F5-CLK21	Wired	PC/AT or compatible computer with a ISA bus
3G8F5-CLK11	Optical fiber	

SECTION 3
Mechanism of the Loop Control Unit

3-1 CONFIGURATION OF FUNCTION BLOCKS 70

3-1-1 Configuration of Function Blocks 70
3-1-2 Preparing Function Block Data Sheets 70
3-1-3 ITEMs Common to All Function Blocks 73
3-1-4 ITEMs Unique to Individual Function Blocks 74
3-1-5 Connecting Function Blocks 80

3-2 DESCRIPTION OF OPERATION 84

3-2-1 When Turning the Power ON to the PC 84
3-2-2 Details of Hot Start, Cold Start and Stop State 87
3-2-3 Indicating run/stop of the Loop Control Unit (common to all function blocks) 89
3-2-4 Stop each function block operation and cancel operation-stop 89
3-2-5 Monitoring the Run Status of Function Blocks 91
3-2-6 Relationship between CPU Unit states and Loop Control Unit States 92
3-2-7 Specifying the Operation Cycle 93
3-2-8 Conditions for Determining the Operation Cycle 96
3-2-9 Order of Operations 98
3-2-10 About Load Rate 100
3-2-11 External I/O Refresh Cycle on the Overall System 106

3-3 EXCHANGING DATA WITH THE CPU UNIT 114

3-3-1 Mutual Exchange of Run Status 114
3-3-2 Exchanging Any Data 117

3-4 EXCHANGING DATA WITH CX-PROCESS MONITOR/SCADA SOTWARE AND WITH OTHER NODES 122

3-4-1 Data Memory (D) for Node Terminals 122
3-4-2 Exchanging Data with CX-Process Monitor 126
3-4-3 Exchanging Data with SCADA Software 130
3-4-4 Exchanging Data with a Loop Control Unit at Other Node 132

3-5 FAIL-SAFE COUNTERMEASURE GUIDELINES 135

3-5-1 Measures When the Loop Control Unit Has Stopped Running 135
3-5-2 Measures for a CPU Unit fatal error 137
3-5-3 Required Conditions for the Man-Machine Interface 137

3-1 Configuration of Function Blocks

All Loop Control Unit functions can be achieved by wiring the function blocks in the software.

3-1-1 Configuration of Function Blocks

Function blocks comprise data items called ITEMs each starting from 000.

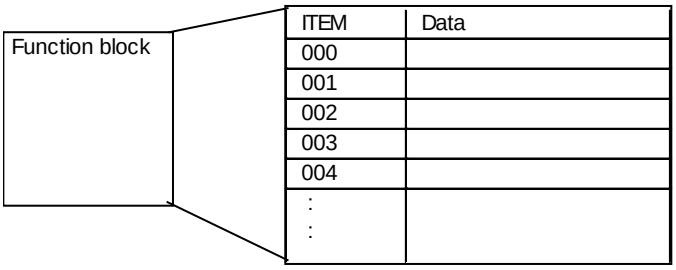

Items from 000 to 004 are common to all function blocks.

ITEM006 and onwards differ according to the Block Model.

3-1-2 Preparing Function Block Data Sheets

CX-Process Tool is used to set data to each item in each function block, and prepare function block data sheets. Function blocks are registered to function block data sheets by being allocated to a block address (address for execution). These function block data sheets need only be transferred (downloaded) to the Loop Control Unit to enable use of the Loop Control Unit. Function block data sheets are prepared as function block files appended with the .ist extention.

Note 1 When the Loop Control Unit is shipped from the factory, function block data sheets are not stored on the Unit. Be sure to prepare function block data sheets using CX-Process Tool and transfer (download) the sheets to the Loop Control Unit.

Follow the procedure below to prepare and download function block data sheets.

1, 2, 3…

1. Allocate the function blocks to block addresses.

   Select the function blocks to be used, and allocate them to block addresses in the function block data sheets.

   Function blocks become executable data once they have been allocated to block addresses.

Allocatable block addresses are determined as follows according to the type of function block. Block addresses other than these cannot be allocated.

Function block type	Allocable block address
Basic PID (Block Model 011) and other Control blocks	001 to 032
Square Root (Block Model 131) and other Operation blocks	100 to 349 (Note 2)
Step Ladder Program block (Block Model 301)	400 to 499
Send to Computer block	501 to 532
Send from All Nodes block	550 to 599
Receive from All Nodes block	600 to 699
CPU Unit Terminal	861 to 876
Expanded CPU Unit Terminal	829 to 860
Field Terminal	901 to 980

Note 2 An internal switch is allocated to block address 349 on CX-Process Tool for temporarily holding data.

Which function block data is written to or which function block data is read from is determined by the block address for each ITEM.

Note 3 Block Model and Block Address

The "Block Model" is a number for specifying the type of block and is not set by the user in CX-Process Tool. Be careful not to confuse the Block Model with the "block address" that is used as the address for execution that IS set by the user.

2. Wire analog signals (or accumulated value signals) between function blocks. (See *3-1-5 Connecting Function Blocks* described later.)

3. Set ITEM data other than the analog signals.

Note 4 Wiring of analog signals (or accumulated value signals) between function blocks is also possible by setting the data of each ITEM.

4. Download the function block data sheets to the Loop Control Unit.

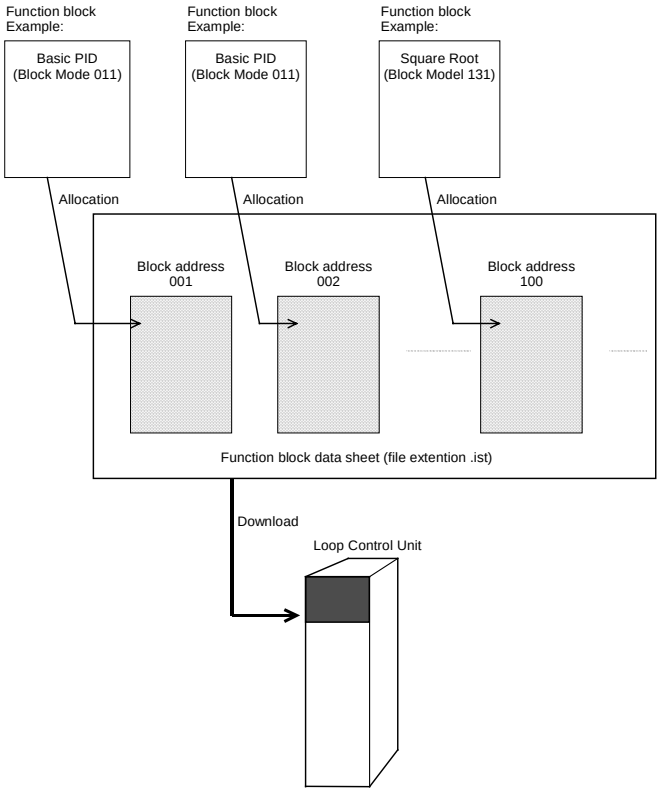

3-1-3 ITEMs Common to All Function Blocks

ITEM type	ITEM No.	Name	Description	R/W mode R: Read, W: Write, R/W: R/W-enabled, —: R/W-disabled Note: r and r/w: Read and write for confirmation of CX-Process Tool operation			
				According to CX-Process Tool	According to CX-Process Monitor	According to ITEM Setting block	According to Step Ladder Program
Contact input	000	Stop block operation command	To stop operation of this function block using a FINS command (including CX-Process Monitor), set this ITEM to 1. When this ITEM is returned to 0, a hot start (state active before the unit was stopped is continued before operation is started) is performed. Note: System Common block (Block Model 000) ITEM000 cannot be used. (Must be set to 0.)	—	—	—	R/W
Parameter	001	Comment	A comment up to 23 characters long can be described in this ITEM. Note: The default in CX-Process Tool is the name of the function block (eight letters).	R/W	—	—	—
	002	Block Model	Set the Block Model of the function block to be registered (allocated) to blocks having this number. The settings of ITEM006 onwards is determined according to the Block Model set here.	R/W	—	—	—
Special	003	Execution error display	An error code is stored here if the data that is set to each ITEM in this function block is inappropriate, an error has occurred in execution of the function block, or the function block data is in error. Note: For details of error codes, see *7-1 Errors and Alarm Troubleshooting*.	r	—	—	
Parameter	004	Operation cycle	Specify the operation cycle group of this function block. Specify whether to execute the function block at the operation cycle (standard setting) specified in the System Common block (Block Model 000), or to execute the block at a different specific operation cycle group (1 to 5). Note: To change the operation cycle, first set System Common block (Block Model 000) ITEM014 to 0 (stop). The operation cycle cannot be changed while the Loop Control Unit is running.	R/W	—	—	—

Note ITEM types and settable modes are the same as for individual ITEMs shown in *3-1-4 ITEMs Unique to Individual Function Blocks*. For details of each ITEM type, see the explanation for the individual function block.

3-1-4 ITEMs Unique to Individual Function Blocks

The following table shows the ITEM types in the case of the Internal Operations block.

ITEM types are divided according to connection and setup mode.

ITEM type	Block diagram symbol	Description	Example	Setting method
Analog input connection information	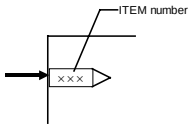	This is indication data for receiving analog data (unit: %) from an analog output ITEM in another function block.	PV source designation (ITEM006) of the Basic PID block	Specify the block address of the source designation and the ITEM number (analog output ITEM). Note: This data can also be set as data for each ITEM or wired in the software.
Analog input	No symbol in block diagram	This is analog data (unit: %) that is received from the source designation specified by the analog input connection information ITEM.	PV input (ITEM007) of the Basic PID block	—
Analog output	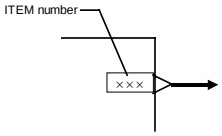	Analog data (unit: %) is sent to the analog input ITEM of another function block.	MV output (ITEM087) of the Basic PID block	This is not specified. (The connection is made by specifying output at the send destination block.)
Contact input	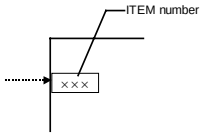	Contact signals are input from the Step Ladder Program block (Block Model 301) or the Contact Distributor block (Block Model 201). *1 Contact signals can also be output to the Step Ladder Program block (Block Model 301) or the Contact Distributor block (Block Model 201). Exception: Note that with some ITEMs the source designation is sometimes specified in the same way as analog input for inputting contact signals.	Remote/Local switch (ITEM026) of the Basic PID block	Contact signals are output to the contact input ITEM of the specified block according to the output instruction in the Step Ladder Program block (Block Model 301) or according to the destination of the Contact Distributor block (Block Model 201). Note: Contact signals are input once via the Step Ladder Program block or the Contact Distributor block also from the System Common block (Block Model: 000, state output for sequence control).
Contact output	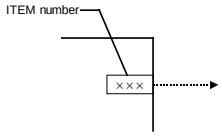	Contact signals are output to Step Ladder Program block (Block Model 301) or the Contact Distributor block (Block Model 201).	High alarm output (ITEM014) of the Basic PID block	Contact signals are input to the contact output ITEM of the specified block according to the input instruction in the Step Ladder Program block (Block Model 301) or according to the source designation of the Contact Distributor block (Block Model 201).

ITEM type	Block diagram symbol	Description	Example	Setting method
Accumulated value input connection information	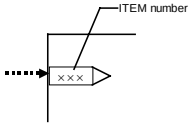	This is the indication data for receiving the accumulation data (00000000 to 99999999) from the accumulated value output ITEM of another function block.	Source designation (ITEM007) of the Accumulated Value Input/Contact Output block (Block Model 186)	Specify the ITEM number (accumulated value output ITEM) of the block Block Model of the source designation. Note: This data can also be set as data for each ITEM or wired in the software.
Accumulated value input	No symbol in block diagram	This is the accumulated value data that is received from the source designation specified by the accumulated value input connection information.	Accumulated value input (ITEM008) of the Accumulated Value Input/Contact Output block (Block Model 186)	—
Accumulated value output	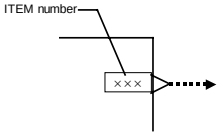	Accumulation data (00000000 to 99999999) is sent to the accumulated value input ITEM of another function block.	Accumulated value (ITEM011, 012) of the Contact Input/Accumulated Value Input block (Block Model 185)	This is not specified. (The connection is made by specifying output at the send destination block.)
Parameter	Basically, no symbol in block diagram (expressed as follows in some cases as an explanation) 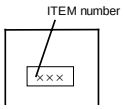	This is internal data upon which neither the above-described analog input/output nor contact input/output operations are performed. There are two types of parameters: parameters whose value can be changed by one or a combination of the methods 1) to 4) below, and parameters whose value cannot be changed by any of the following methods (only indicated) in 5) below.		
		1) Parameter value can be changed by CX-Process Tool	High alarm setting (ITEM009) of the Basic PID block	Set in CX-Process Tool.
		2) Parameter value can be changed by CX-Process Monitor.	Local Set Point setting (ITEM023) of the Basic PID block	Set in CX-Process Monitor.
		3) Parameter value can be changed by the Constant ITEM Setting block (Block Model 171) or the Variable ITEM Setting block (Block Model 172).	Proportional band setting (ITEM054) of the Basic PID block	Constants or variables (analog signals) are written according to the write destination of the Constant ITEM Setting block (block number 171) or the Variable ITEM Setting block (block number 172).

ITEM type	Block diagram symbol	Description		Example	Setting method
			4) Parameter value can be changed by the Step Ladder Program block (Block Model 301) or the Contact Distributor block (Block Model 201).	Auto/Manual switch (ITEM086) of the Basic PID block	This data is set according to the Step Ladder Program block (block number 301) or the Contact Distributor block (block number 201). Note: Only "parameters" that are also "contact inputs" (ITEMs whose ITEM type is specified as "contact input/parameters" in the Function Block Reference Manual)
			5) Indication only (by CX-Process Monitor or Step Ladder Program)	PV execution error indication (ITEM019) of the Basic PID block	Cannot be set

The following table shows the ITEM types in the case of the Field Input/Output block.

Function	ITEM type	Block diagram symbol	Description	Setting method
External analog input	Specification of external analog input	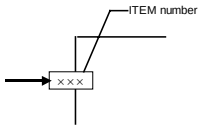	Analog signals are received from the Analog Input Unit having the specified unit number.	Specify the unit number of the Analog Input Unit.
	Analog output	Same as regular analog output ITEM		
External analog output	Analog input connection information	Same as regular analog input ITEM		
	Analog input			
	Specification of external analog output	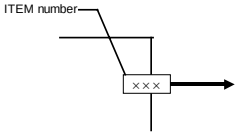	Analog signals are sent to the Analog Output Unit having the specified unit number.	Specify the unit number of the Analog Output Unit.
External contact input	Specification of external contact input	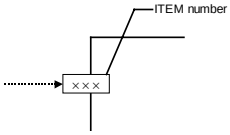	Contact signals are received from the Contact Input Unit allocated to the leading specified CIO (channel I/O) Area.	Specify the leading CIO (channel I/O) Area allocated to the Contact Input Unit.
	Contact output	Same as regular contact output ITEM		
External contact output	Contact input	Same as regular contact input ITEM		
	Specification of external contact output	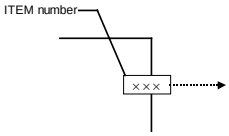	Specify the leading CIO (channel I/O) Area allocated to the Contact Output Unit.	Contact signals are sent to the Basic I/O Unit allocated to the leading specified CIO (channel I/O) Area.

Note 1 Conventions Used in Describing ITEMs

Refer to the *Function Block Reference Manual*.

The Function Block Reference Manual defines reading and writing methods according to the following four methods as one of R: Read, W: Write, or R/W: R/W-enabled.

1) According to CX-Process Tool

   a) Upload/download of function block files (appended with the .ist extension)

   b) This indicates reading/writing on validate action or monitor run status windows.

      By uploading/downloading by function block files (appended with the .ist extension), ITEMs are divided into two types: ITEMs to be set as defaults (called "default data") and ITEMs (called "operation data") that can be set in either CX-Process Tool or CX-Process Monitor.

      R: Upload by file, W: Download by file

      (S): Initial setting data, (O): Operation data

      r: Read in the validate action window of CX-Process Tool or the monitor status window of CX-Process Monitor

      w: Write in the validate action window of CX-Process Tool

2) According to CX-Process Monitor

   This indicates reading/writing on the Tuning screen or Control screen.

3) According to ITEM Setting block

   This indicates reading/writing by the Constant ITEM Setting block (Block Model 171) or the Variable ITEM Setting block (Block Model 172).

4) According to Step Ladder Program

   This indicates reading/writing by the Step Ladder Program (Block Model 301) or the Contact Distributor block (Block Model 201).

5) Send/Receive All Blocks

   This indicates reading/writing by the Receive All Blocks block (Block Model 461) or the Send All Blocks block (Block Model 462).

- ●ITEM type: Indicates the type of ITEM according to the following categories:
  (For details of categories, see 3-1-1 "Configuration of Function Blocks" in this manual.
  Contact input, contact output, analog input, analog output, analog input connection information, accumulated value input, accumulated value output, accumulated value input connection information and parameter
- ●ITEM: Indicates the ITEM number in ascending order.
- ●Symbol: Indicates the symbol that is indicated in CX-Process Tool.
  Analog input: X, Analog output: Y, Contact input: S, Contact output: U, etc.
- ●Data description: Indicates the name of the ITEM and its content.
- ●Data range: Indicates the range of data that can be stored.
- ●Default: Indicates the default on CX-Process Tool.
- ●R/W mode: Indicates which of the following modes each ITEM can be read or written by. (R: Read, W: Write, R/W: R/W-enabled)
  CX-Process Tool, CX-Process Monitor (Tuning screen, Control screen), ITEM Setting blocks (block models 171/172), Step Ladder Program (block model 301)
  Send/Receive All Blocks: Send All Blocks (block model 462) and Receive All Blocks (block model 461)
  Note: On CX-Process Tool, the R/W mode is indicated by W: Download in file units, R: Upload in file units, r: Read in the validate action window or monitor run status window, r/w: Read/write in the validate action window or monitor run status window, (S): Initial setting data (can be set only in CX-Process Tool), (O): Operation data (can be set in both CX-Process Tool and CX-Process Monitor)
- ●Data length: Indicates the data length (bytes) when each ITEM is read or written by a FINS command. This item has no meaning for other commands.

ITEM type	ITEM	Symbol	Data description	Data range	Default	R/W mode R: Read, W: Write, R/W: R/W: enabled, -: R/W-disabled Note: r and r/w: Read and read/write for validate action or monitor run status by CX-Process Tool or Monitor. S: Initial setting data, (O): Operation data					Data length (bytes)
						According to CX-Process Tool	According to CX-Process Monitor *1	According to ITEM Setting block	According to Step Ladder Program	Send/ Receive All Blocks	
Contact input	000		Stop block operation command (0: Cancel stop, 1: Stop)	0, 1		—	—	—	—		1
Parameter	001		Comment	23 characters	0	R/W	—	—	—		24
	002		Model: Basic PID	011	011	R/W	—	—	—		2
Special	003		Execution error indication 0: Normal, Other: Error (See Appendix "Execution Error Code List.")		0000	R	—	—	—		2

Each of the ITEMs in function blocks can be read and written by FINS commands (command codes 0240, 0241, 0242 or 0243 Hex).

All ITEMs excluding the following items can be read and written by FINS commands:

- Sequence commands (ITEM011 onwards) of the Step Ladder Program block (Block Model 301)

Note 2 All analog signals on the Loop Control Unit are processed (input or output) in % units. (They are not processed in engineering units.) Though the data range varies according to each ITEM, the maximum range is -320.00 to +320.00%. For example, the data range for PV or Set Point in Control blocks such as the PID block is -15.00 to +115.00%, and the data range for MV is -320.00 to +320.00%. When analog signals are connected, data is handled with "%" as the common unit regardless of differences in the data ranges between ITEMs. (Note, however, that minus values are regarded as 0.00% when entered to ITEMs whose data range starts from 0.00%.)

The following three processes are required for displaying or setting in engineering units:

1) Use CX-Process Tool to specify function blocks such as Control blocks or analog signals (including parameters) and contact signals (including parameters) to be monitored by CX-Process Monitor as the source designation in the Block Send Terminal to Computer blocks.
2) Use CX-Process Tool to set the tag numbers for function blocks or analog signals (including parameters) and contact signals (including parameters), and set the high and low limit scaling and unit. (A default fixed name "tag ITEM" is already allocated to each of the ITEMs in the function blocks.)
3) Use CX-Process Monitor to select the tag ITEM or tag number that was selected in CX-Process Tool above, and display or set each ITEM (for example, Set Point or PV) in the function blocks or the analog signals (including parameters) and contact signals (including parameters) in engineering units.

ITEMs in the Step Ladder Program block

The table below shows the content of the 100 ITEMs ITEM011 to ITEM110 in the case of the Step Ladder Program block (Block Model 301).

ITEM type	Block diagram symbol	Description	Setting method
Sequence command	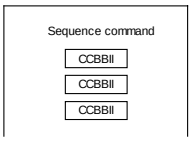 Note: CC: Command code, BB: Block address, II: ITEM No.	• ITEM011 to ITEM110 correspond to individual commands. • A single command (e.g. LOAD, OUT) is described to a single ITEM, and the block address and ITEM number of the specified input source and output destination are described as operands. • Commands are described using command codes 01 to 30 (e.g. LOAD is 01 and OUT is 07).	Describe commands to ITEM011 to ITEM110 of the Step Ladder Program block (Block Model 301).

Example of a single command

ITEM	Command code (command)	Operand
011	01 (LOAD)	001 013 (block address, ITEM No.)

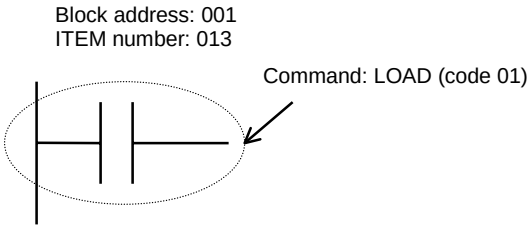

Example of multiple commands

ITEM	Command code (command)	Operand
011	01 (LOAD)	001013 (block address, ITEM No.)
012	07 (OUT)	100011 (block address, ITEM No.)
013	01 (LOAD)	100011 (block address, ITEM No.)
014	03 (AND)	001026 (block address, ITEM No.)
015	07 (OUT)	002086 (block address, ITEM No.)
016	000 (END)	(end of block)

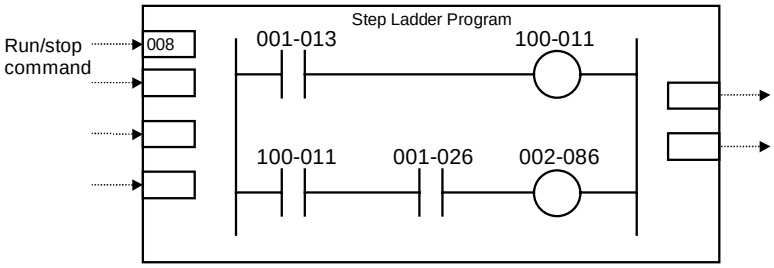

- 100-011 turns ON at 001-013 ON.
- 002-086 turns ON at 100-011 ON and 001-026 ON.

3-1-5 Connecting Function Blocks

- For analog signals (variables) and accumulated value signals, specify the block address and ITEM number of the source designation in the ITEMs of the send destination block.
- Specify contacts not in that function block but in the Step Ladder Program block (Block Model 301) or the Contact Distributor block (Block Model 201).
- Also, specify parameters*1 not in that function block but in the Constant ITEM Setting block (Block Model 171) or the Variable ITEM Setting block (Block Model 172).

  *1: Some parameters cannot be set by ITEM Setting blocks. (For details, refer to the read/write details of each ITEM in the *Function Block Reference Manual*.

Note Contacts can be connected only via the Step Ladder Program block (Block Model 301) or the Contact Distributor block (Block Model 201). In other words, contacts cannot be connected directly.

- When connecting accumulated values, analog signals and contact signals between function blocks, only one signal can be connected to a single input ITEM. However, an infinite number of branches can be made from a single output ITEM.

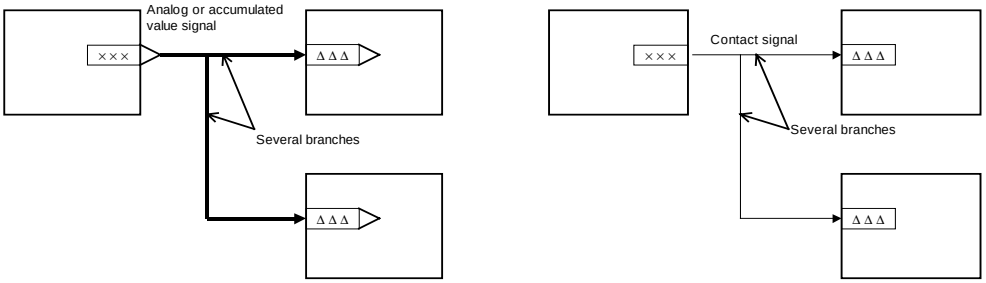

Connecting analog signals (variables) and accumulated value signals

Specify in the analog input ITEMs which analog output ITEM and its block address are to be used to introduce analog signal function blocks on the input side.

Example To introduce ITEM006 (PV) of the Basic PID block of block address 001 from ITEM011 (Y1) of the Square Root block of block address 100.

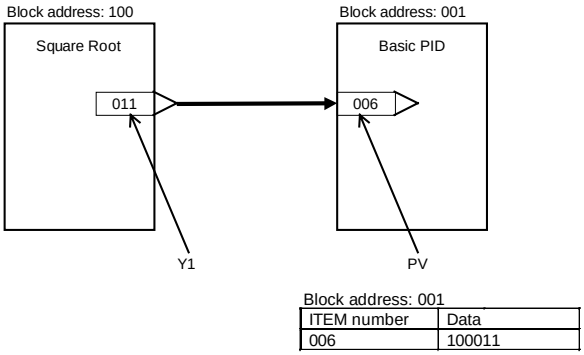

Note Connection of analog signals or accumulated value signals can be executed on CX-Process Tool separately from setting of ITEM data as wiring of function blocks. (Connection of analog signals or accumulated value signals can also be set as ITEM data.)

Connecting contact signals

Contact signals are connected via the Step Ladder Program block (Block Model 301) or the Contact Distributor Block (Block Model 201). *1

Specify both contact inputs (Step Ladder Program block or Contact Distributor block to specified function block) and contact outputs (specified function block to Step Ladder Program block or Contact Distributor block) in the Step Ladder Program block (Block Model 301) or the Contact Distributor Block (Block Model 201). Do not specify these contact signals to ITEMs in the specified function block.

Note On CX-Process Tool, connection of contact signals is executed at setting of ITEM data.

*1: As an exception, with some of the ITEMs (PV error input of ITEM018 and MV error input of ITEM090 of the Basic PID block or the Advanced PID block) contacts are input specified as the source designation.

Connecting via the Step Ladder Program block

When logical operation is required, use the Step Ladder Program block (Block Model 301).

Example Input ITEM086 (Auto/Manual switch) of the Basic PID block of block address 001, and output ITEM086 reflected in ITEM026 (Remote/Local switch) of the Basic PID block of block address 002.

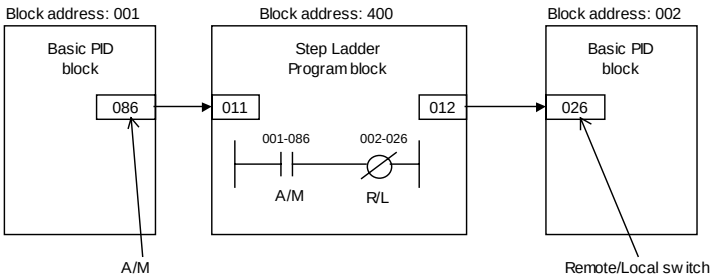

Block address: 400

ITEM number	Command	Command code	Operand
011	LOAD	01	001086
012	OUT NOT	12	002026

Connecting via the Contact Distributor block

When logical operation is not required, use the Contact Distributor block (Block Model 201).

Example Input ITEM014 (High PV alarm) of the Basic PID block of block address 001, and write ITEM014 to ITEM021 (A1 selection command) of the Constant Selector block (Block Model 165) of block address 100.

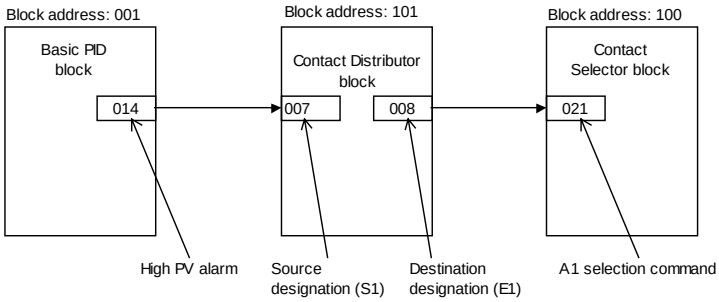

Block address: 101

ITEM number	Data
007	001014
008	100021

Connecting ITEM settable parameters

Constants (fixed values) or variables (analog signals) are set by the Constant ITEM Setting block (Block Model 171) or Variable ITEM Setting (Block Model 172).

To write constants (fixed values)

Example Set constant 5000 (50.00) to ITEM023 (local Set Point) of the Basic PID block of block address 001.

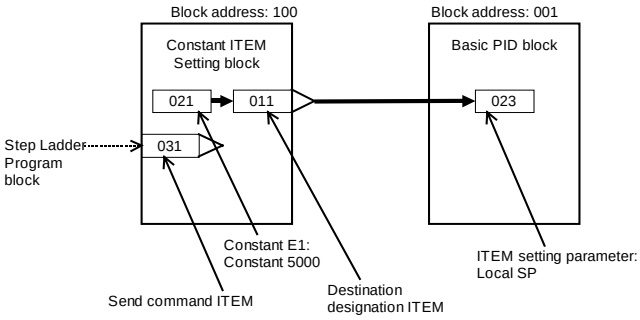

Block address: 100

ITEM number	Data
011	001023
021	5000

To write variables (analog signals)

Example Set the value of ITEM029 (current Set Point) of the Basic PID block of block address 001 to ITEM009 (H high alarm setting) of the Basic PID block of block address 002.

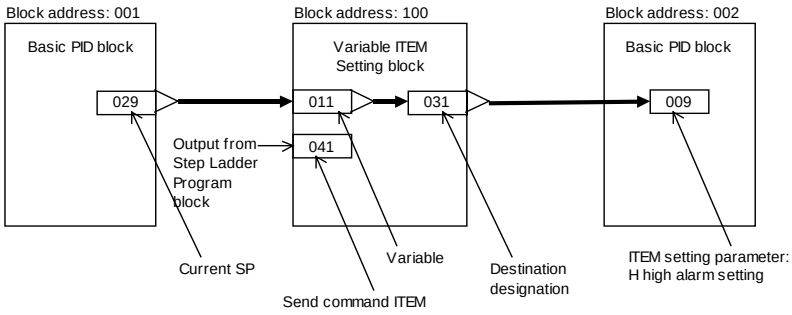

Block address: 100

ITEM number	Data
011	001029
031	002009

Note When connections between function blocks are set by ITEM data, do not mistake the ITEM type (for example, specify a connect ITEM as the source designation for an analog signal).

3-2 Description of Operation

3-2-1 When Turning the Power ON to the PC

Default state

Function block data is not stored to the Loop Control Unit when it is shipped from the factory. CX-Process Tool must be used to prepare function blocks and download them to RAM in the Loop Control Unit.

State after function block data is downloaded, and how to start running after the download

After the function block data is downloaded to RAM or transferred between RAM and flash memory, the Loop Control Unit will be in a stop state. Perform either of the steps (1) or (2) to start the Loop Control Unit.
ntlp

(1) Use CX-Process Tool to indicate either a hot start or a cold state. ([Execution]-[Run]-[Run/stop command])

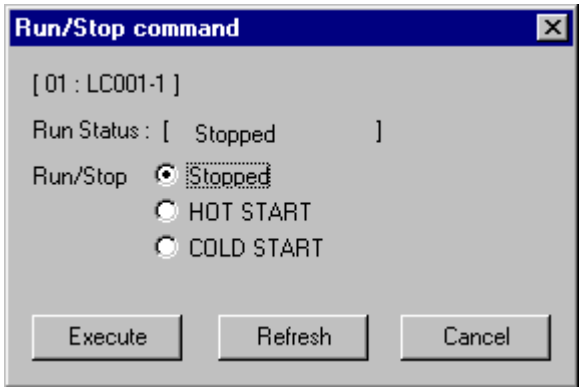

Note By a hot start, operation is started continued at the state that was active before the stop occurred. By a cold start, operation is started after all internal operation memory is initialized. (PID is reset to the Manual mode.)

For details on hot start and cold start, see *3-2-2 Details of Hot Start, Cold Start and Stop State*.

(2) Turn the power to the PC OFF then back ON again.

⚠WARNING Check the following items before starting to run the Loop Control Unit:

(1) Analog Input/Output Units used in combination with the Loop Control Unit must be mounted correctly, and the unit number set on the front panel of the Analog Input/Output Unit must match the unit number set on the Field Terminal block. If the unit numbers do not match, input/output (read/write) is performed on the data of another Special I/O Unit (whose unit number is set on the Field Terminal block).

(2) The defaults of the System Common block on the Loop Control Unit must be set correctly. In particular, make sure that the Data Memory (D) for the Node Terminals on the CPU Unit used by the Loop Control Unit is not set in duplicate for other applications on the PC. If the application of the Data Memory is set in duplicate, the PC system may act unexpectedly and cause injury.

(3) When writing data to the I/O memory in the CPU Unit with function blocks (e.g., using Send All Blocks, Expanded DO/AO Terminal to CPU Unit, or DO/AO Terminal to CPU Unit), be sure that the words written to in the I/O memory are not being used for any other purpose. If I/O memory words are allocated to more than one purpose, the PC system may act unexpectedly and cause injury.

Selecting the START mode at power ON

If DIP switch pin 2 is OFF (no flash memory transfer at startup), set either a cold start or hot start at ITEM018 (START mode at power ON) of the System Common block (Block Model 000) when the power of the Loop Control Unit is turned ON (PC power is turned ON) or the Loop Control Unit is restarted (CPU Bus Unit Restart flag state changes from OFF to ON). CX-Process Tool is used to set this.

If DIP switch pin 2 is ON (flash memory transfer at startup), the setting of ITEM 018 will be ignored and a cold startup will be used automatically.

ITEM018	Description
1	HOT start (default)
2	COLD start

If DIP switch pin 2 is OFF, the default for the Loop Control Unit is a hot start when the power to the PC Unit is turned ON or the Loop Control Unit is restarted.

When a hot start is performed, operations are started with all ITEMs and function block values stored internally for operations held at the states that were active before the stop occurred.

The RUN LED on the front panel also lights at a hot start.

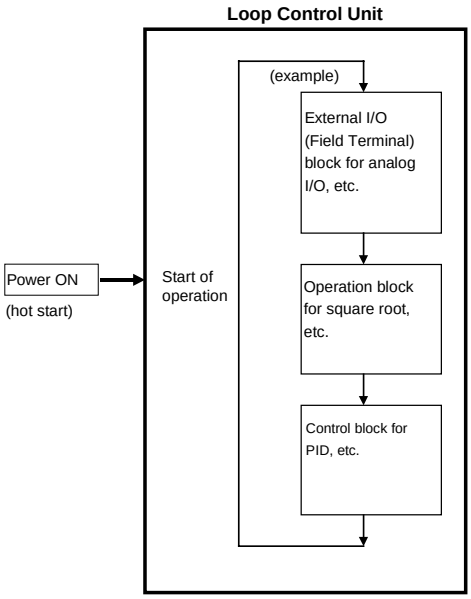

Relationship with the operation mode of the CPU Unit

The Loop Control Unit continues running regardless of the operation mode of the CPU Unit.

CPU Unit operation mode	Running of Loop Control Unit
PROGRAM mode	Running is continued.
RUN mode	
MONITOR mode	

Automatic transfer from flash memory to RAM

If DIP switch pin 2 is ON, the function block data stored in flash memory will be automatically transferred to RAM at startup. This enables battery-free operation. To prepare for battery-free operation, the function block data must be store in flash memory in advance using the CX-Process Tool.

Note Before turning ON pin 2 on the DIP switch, transfer the function block data to the flash memory using the CX-Process Tool. If the function block data is not stored in flash memory, RAM data will be overwritten and deleted at startup.

3-2-2 Details of Hot Start, Cold Start and Stop State

There are two modes in which running of the Loop Control Unit is started: hot start and cold start.

Assuming DIP switch pin 2 is OFF, the default mode for the Loop Control Unit is a hot start when the power to the PC is turned ON or the Loop Control Unit is restarted.

- By a hot start, operation is started continued at the state that was active before the stop occurred. This mode is effective when a short power OFF such as an instantaneous power interruption has occurred.
- By a cold start, operation is started after all internal operation memory is initialized. (PID is reset to Manual.) This mode is effective when running is started after a long power OFF.

  The following table describes each of the Loop Control Unit states at a hot start, cold start or in a stop state.

<table>
<tr><th colspan="2" rowspan="2">Description</th><th colspan="2">Start of running</th><th rowspan="2">Run stop</th></tr>
<tr><th>Hot start</th><th>Cold start</th></tr>
<tr><td colspan="2"></td><td>State active before the unit was stopped is continued before running is started.</td><td>Operation is started after contact/analog I/O values and internally held values are cleared to zero.</td><td>Running is stopped with the state active before the stop held.</td></tr>
<tr><td rowspan="3">Control blocks</td><td>Set Point</td><td rowspan="7">State active before stop is held.∗2</td><td>State active before stop is held.</td><td rowspan="7">State active before stop is held. ∗2</td></tr>
<tr><td>MV</td><td>0%</td></tr>
<tr><td>Auto/Manual switching</td><td>Manual state</td></tr>
<tr><td rowspan="3">Control blocks, Operation blocks</td><td>Parameter</td><td>State active before stop is held.</td></tr>
<tr><td>Contact/analog I/O value</td><td>Initialization∗1</td></tr>
<tr><td>Internal hold value for operation</td><td>Initialization∗1</td></tr>
<tr><td colspan="2">Step Ladder Program</td><td>STEP01</td></tr>
<tr><td rowspan="2">Data exchange with CPU Unit</td><td>Status of Loop Control Unit (allocated CIO area)</td><td colspan="3">Execution at each 1s regardless of running state</td></tr>
<tr><td>Data exchange with function blocks</td><td colspan="2">Refresh is executed at each running cycle.</td><td>Data exchange stopped</td></tr>
</table>

∗1: Data to be initialized (cleared) at a cold start are the following values held internally for operations:

Result of previous operation on time function blocks such as the First-order Lag block or Accumulator blocks

Current measurement values of the Step Ladder Program block such as the Timer block or Counter block

∗2: Parameters that are held in memory are all ITEMs and values held internally for operations

Note 1 When the START mode at power ON is set to hot start, correct operation results cannot be obtained if the power is turned ON after a long power OFF. For this reason, use CX-Process Tool or CX-Process Monitor to stop running of the Loop Control Unit and start the Unit in the cold start mode to clear old data held internally in function blocks that was active before the power was turned OFF.

Note 2 By a cold start, the Basic PID block (Block Model 011) or Advanced PID block (Block Model 012) are set to Manual. Perform either of the following operations after turning the PC power ON or restarting the Loop Control Unit to set the Basic PID block (Block Model 011) or Advanced PID block (Block Model 012) on the Unit to Auto.

- Switch the Manual mode to the Auto mode using CX-Process Monitor.
- Switch the Manual mode to the Auto mode in the Step Ladder Program block (Block Model 301)

  In this operation, the ladders in the Step Ladder Program block must be programmed as follows so that ITEM086 (Auto/Manual switch) of the Basic PID block or Advanced PID block is set to 1 taking ITEM019 (Run Start flag) and ITEM017 (cold start in progress) of the System Common block as the input conditions.

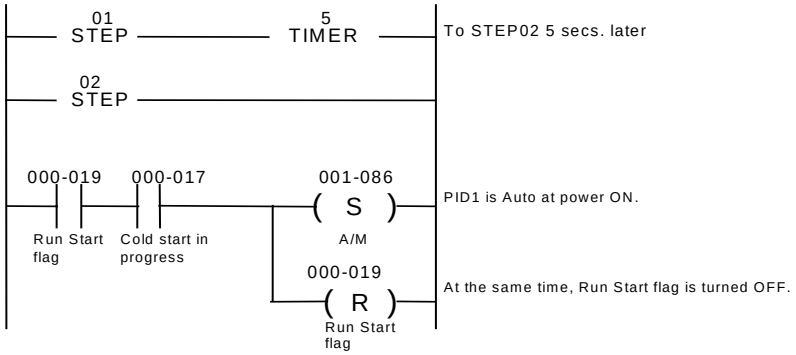

Note 3 All function blocks are executed at all times by turning the PC power ON or restarting the Loop Control Unit.

However, execution of some function blocks is triggered by changes in the state of specific ITEMs for some functions, for example, in the Constant ITEM Setting block (Block Model 171) and the Variable ITEM Setting block (Block Model 172).

3-2-3 Indicating run/stop of the Loop Control Unit (common to all function blocks)

Running of the Loop Control Unit is started according to the START mode at power ON by turning ON the power to the PC or by restarting the Loop Control Unit.

There are four ways of indicating run/stop of the Loop Control Unit (common to all function blocks) when the PC power is turned ON.

1) By operating CX-Process Monitor

   (Both run start and stop can be specified.)

2) By operating CX-Process Tool

   (Both run start and stop can be specified.)

3) By issuing the FINS WRITE ITEM commands (command codes 0241 and 0243 Hex) to change ITEM014 (run/stop command) of the System Common block (Block Model 000)

   (Both run start and stop can be specified.)

4) By changing ITEM014 (run/stop command) of the System Common block (Block Model 000) by the ITEM Setting blocks (Block Models 171 and 172). (Only run stop can be specified.)

Note 1 ITEM014 of the System Common block cannot be set to 1 (hot start) or 2 (cold start) by ITEM Setting blocks. Only 0 can be set.

Note 2 Setting to a hot start or cold start is not accepted if these modes are instructed while the Loop Control Unit is already running.

Note 3 ITEM014 (run/stop command) of the System Common block (Block Model 000) cannot be changed directly by the Step Ladder Program block (Block Model 301). It is changed via the ITEM Setting blocks.

3-2-4 Stop each function block operation and cancel operation-stop

Operation of each function block can also be stopped and stop canceled.

Note, however, that the START mode when an operation stop of each function block is canceled is the hot start mode. The cold start mode cannot be set.

There are two ways of performing the above operations.

1) By CX-Process Tool (Both operation can be stopped and operation stop canceled in the Monitor run status screen.)

2) By issuing the FINS WRITE ITEM commands (command codes 0241 and 0243 Hex) to change ITEM000 (stop block operation command) of the System Common block (Block Model 000)

Note 1 Be sure to set 0 to ITEM000 of the System Common block (Block Model 000). If this ITEM is set to 1, the Loop Control Unit stops running, and data exchange with the CPU Unit is stopped.

Note 2 The following shows the relationship between the run/stop command (ITEM014) of the System Common block and the stop block operation command (ITEM000) of each function block.

When the hot start mode or cold start mode has been set by run/stop command (ITEM014) of the System Common block, ITEM000 of all function blocks automatically becomes 0 (cancel stop), and operation is started by a hot start or cold start.

		ITEM014 of System Common block		
		Set to 0 (stop)	Set to 1 (hot start)	Set to 2 (cold start)
ITEM000 of each function block (stop/cancel stop)	If 1 (stop)	The function block remains stopped (1).	0 Becomes 0 (cancel stop) and hot start is performed.	Becomes 0 (cancel stop) and cold start is performed.
	If 0 (cancel stop)	Stop (priority given to System Common blocks)		

3-2-4-1 Indicating Loop Control Unit start/stop from the CPU Unit

Start/stop of running of all function blocks

To instruct Loop Control Unit start/stop under certain conditions by the CPU Unit, execute the CMND command in the Step Ladder Program on the Loop Control Unit, and issue the FINS WRITE ITEM command (command codes 0241 or 0243 Hex) to change ITEM014 (run/stop command) of the System Common block.

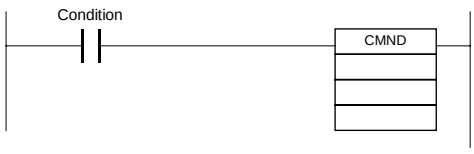

Stop a specific function block operation and cancel operation-stop

To instruct stopping of a specific function block operation or cancellation of operation stop by the CPU Unit, execute the CMND command in the step ladder program on the Loop Control Unit, and issue the FINS WRITE ITEM commands (command code 0241 or 0243 Hex) to change ITEM000 of that specific function block to 1 or 0.

The above operations can also be performed in the Monitor run status screen of CX-Process Tool.

3-2-5 Monitoring the Run Status of Function Blocks

The run status of function blocks can be monitored as follows:

When monitoring the run status common to all function blocks

The run status common to all function blocks on the Loop Control Unit can be monitored by one of the following methods.

Check method		Running	Stopped
1.	RUN LED on front panel of Loop Control Unit	Lit	Out
2.	Monitor the run status ([Execute]-[Run]-[Monitor run status]) on CX-Process Tool	1 (ON): Hot start in progress or cold start in progress	1 (ON): Stopped
3.	Bit 00 of the leading word (nth word) of the 25 words of the allocated CIO area of the Special CPU Unit	1 (ON)	0 (OFF)
4.	ITEM015 of System Common block	0 (OFF)	1 (ON)
	ITEM016 of System Common block	Hot start: 1 (ON)	0 (OFF)
	ITEM017 of System Common block	Cold start: 1 (ON)	0 (OFF)
5.	Bit 00 of the leading role +1 word in the system information of the Data Memory for the Node Terminals (Data is for CX-Process Monitor.)	1 (ON)	0 (OFF)

When monitoring the run status of individual function blocks

The run status of individual function blocks can be monitored by either of the following methods when the run status common to all function blocks on the Loop Control Unit is "running."

	Method	Running	Stopped
1.	Monitor the run status ([Monitor run status]-[Start]) on CX-Process Tool	No indication	"Stopped" indicated
2.	ITEM000 of each function block	0 (OFF)	1 (ON)

3-2-6 Relationship between CPU Unit states and Loop Control Unit States

3-2-6-1 Conditions for stopping and continuing running of the Loop Control Unit

Running of the Loop Control Unit is stopped or continued under the following conditions.

Running stop conditions	Running continuation conditions

● When the following malfunctions occur:
• Unit number setting error
• Initial recognition error
  • Unit error
  • Function block database error (when all function blocks are in error)
  • CPU Unit error (WDT error, cyclic monitor error, bus error)
  • CPU of CPU Unit in standby mode
  • CPU Unit fatal error (including execution of FALS command)
  • Load rate exceeded at operation cycle of 2 sec (Operation Cycle Automatic Switching Generation flag is ON)
	● When the following malfunctions occur:
	• Battery error
	• Function block database error (when only a specific function block is in error)
	• CPU Unit non-fatal error (including execution of the FAL command)
	● When CPU is in one of PROGRAM, RUN or MONITOR modes
	● When output of the CPU Unit is OFF (Output OFF flag is ON)

Note When the operation cycle of the Loop Control Unit is set to two seconds, running of the Loop Control Unit is stopped when the load rate exceeds 70% ten times continuously. (For details, see *Section 3-2-10*.)

3-2-6-2 Operation of the Loop Control Unit at a CPU Unit fatal error

When running of the CPU Unit has stopped due to a fatal error (including execution of the FALS command), running of the Loop Control Unit is also stopped.

Note Analog Output Units C200H-DA003/004, CS1W-DA08V/C and CS1W-DA041 and Analog Input/Output Units C200H-MAD01 and CS1W-MAD44 have a function (output hold function) for holding the analog output value to one of the previous value, minimum value or maximum value when either of the following has occurred:

- Fatal error (including execution of the FALS command)
- Output OFF

For this reason, use this output hold function of the Analog Output Unit to hold the analog output values to a specific value when running of both the CPU Unit and Loop Control Unit has stopped.

3-2-6-3 Operation of the Loop Control Unit when the CPU Unit is in the PROGRAM mode

The Loop Control Unit continues to run even if the CPU Unit is in the PROGRAM mode.

3-2-6-4 Operation of the Loop Control Unit when the CPU Unit is in the Output OFF condition

The Loop Control Unit continues to run even if the Output OFF flag causes output refreshing of the CPU Unit to stop. Note, however, that in this case contacts are not output and turn OFF, and the output hold function of the Analog Output Unit holds analog output to a specific value. For this reason, the Loop Control Unit only performs internal operations, and does not perform control on the outside.

3-2-7 Specifying the Operation Cycle

All of the function blocks (for example, all Field Terminals and the Step Ladder Program block) on the Loop Control Unit are executed cyclically.

Basically*1, all function blocks (including the Step Ladder Program block) are executed at a default common operation cycle of one second that is set in the System Common block (Block Model 000). In other words, at the default setting, the operation cycle of all function blocks is one second, and all function blocks are executed at every second.

For example, when all function blocks A, B, C and D in the figure below are executed and the total execution time is less than one second, function block execution idles until the preset 1-second operation cycle is reached, and execution is resumed from function block A as the next operation cycle.

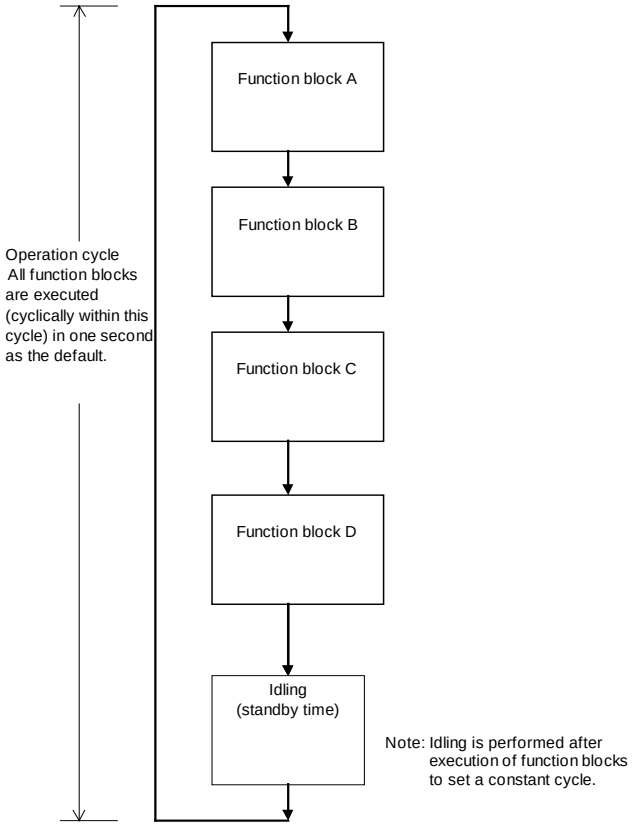

3-2-7-1 When executing all function blocks at a common operation cycle

Basically*1, the default operation cycle (ITEM004) of all function blocks is the system common operation cycle. (In other words, the operation cycle of each function block is interlocked with the value set at ITEM004 of the System Common block.) The default system common operation cycle (ITEM004) of the System Common block (Block Model 000) is one second.

To change the system common operation cycle to a value other than one second, set one of the following values to the system common operation cycle (ITEM004) of the System Common block (Block Model 000).

1: 0.1 sec, 2: 0.2 sec, 3: 0.5 sec, 4: 1 sec, 5: 2 sec (default is 4: 1 sec)

*1: As an exception, 0 (system common operation cycle) and 5 (2 sec) cannot be set only in ITEM004 (operation cycle) of the following function blocks:

Rate-of-change Operation and Alarm (Block Model 113)

Analog Signal Hold (Block Model 118)

Moving Average (Block Model 145)

Ramp Program (Block Model 155)

Segment Program (Block Model 156)

Note Before changing ITEM004 (system common operation cycle) of the System Common block (Block Model 000), be sure to stop running of the Loop Control Unit, and then resume running of the Unit in the cold start mode. Otherwise, the Unit does not function normally.

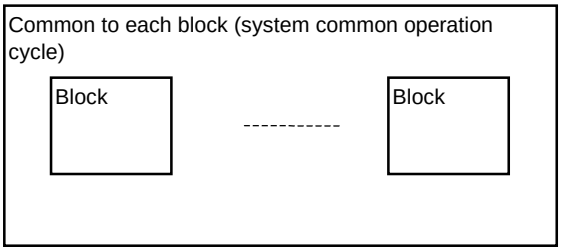

3-2-7-2 When executing a specific function block at a specified operation cycle

When changing the operation cycle of a specific function block, change ITEM004 (operation cycle) of the respective function block to one of 1: 0.1 sec, 2: 0.2 sec, 3: 0.5 sec, 4: 1 sec or 5: 2 sec from the default "0: common to each block."

In this way, you can set the operation cycle of each function block to any one of five groups (0.1 sec, 0.2 sec, 0.5 sec, 1 sec or 2 sec) (six groups if the system common operation cycle is included). Operation cycle settings of specific function blocks can co-exist with the system common operation cycle. This means that certain function blocks can execute at the system common operation cycle, while other groups can execute at another operation cycle, for example, 0.1 seconds.

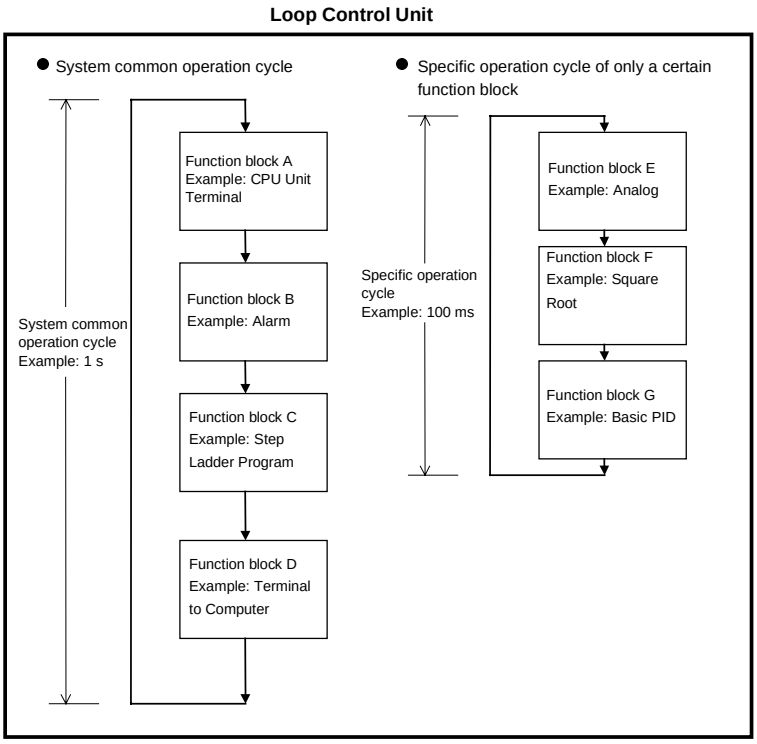

The operation cycle of specific function blocks can be specified to be shorter than the default 1-second operation cycle in the following instances:

- To increase the refresh cycle of analog input/output and the PID operation execution cycle in a pressure or flowrate control loop

  In this case, set the operation cycle of all function blocks that are used in a single loop (for example, analog input, square root and other operations, PID control and analog output) to the same shorter value.
- To increase the execution timing, for example, in Remote/Local switching
- To reduce the minimum resolution (time accuracy) of Timer and Counter blocks on the Loop Control Unit
- The minimum resolution (time accuracy) of Timer and Counter blocks on the Loop Control Unit is the same as the operation cycle. So, in this case, set the operation timer of the Timer block (Block Model 205) and Counter block (Block Model 208) to shorter values.

3-2-8 Conditions for Determining the Operation Cycle

The following three conditions must be satisfied on the Loop Control Unit when determining the operation cycle:

1) The load rate (ratio between actual operation execution time and set operation time) must be 60% or less. (For details, see *3-2-10 About Load Rate* on page 100.)
2) The external I/O refresh cycle of the entire system must not be same as the operation cycle of the function blocks. In most cases, the maximum "external I/O refresh cycle" is as follows depending on the timing of operations:

   "about five times the cycle time of the CPU Unit" + "twice the operation cycle of the function blocks on the Loop Control Unit"

   Study whether or not any problems will arise in controllability of PID control on the target application. (For details, see *3-2-11 External I/O Refresh Cycle on the Overall System*.)
3) Due to the relationship with the cycle time of the CPU Unit, the operation cycle of the Field Terminal, CPU Unit Terminal, Expanded CPU Unit Terminal and Node Terminal blocks must be a certain value or more (in most cases, about 3.3 times the cycle time). (For details, see *3-2-11-3 Restrictions on operation cycles of function blocks used for data exchange with the CPU Unit*.)

Note 1

- Before changing ITEM004 (operation cycle) of each function block, set ITEM014 (run/stop command) of the System Common block to 0 (stop). ITEM004 cannot be changed while the Loop Control Unit is running.
- To send the data of the Basic PID block (Block Model 011) and Advanced PID block (012) to CX-Process Monitor by the Block Send Terminal to Computer blocks (Block Models 403 and 404) set the operation cycles of the Block Send Terminal to Computer blocks to the same value or longer than that of the Basic PID block or Advanced PID block. If the operation cycle of the Block Send Terminal to Computer blocks is shorter, the Set Point value momentarily becomes 0 immediately after the Loop Control Unit is started in the cold start mode.

Note 2

The execution cycle of sequence commands in the Step Ladder Program block depends on the operation cycle of the Step Ladder Program block (Block Model 301) itself. So, the operation cycle is slower than the execution cycle (cycle time) of commands on the CPU Unit. For this reason, the Step Ladder Program block is used in combination with other function blocks. When high-speed processing is required, use commands on the CPU Unit.

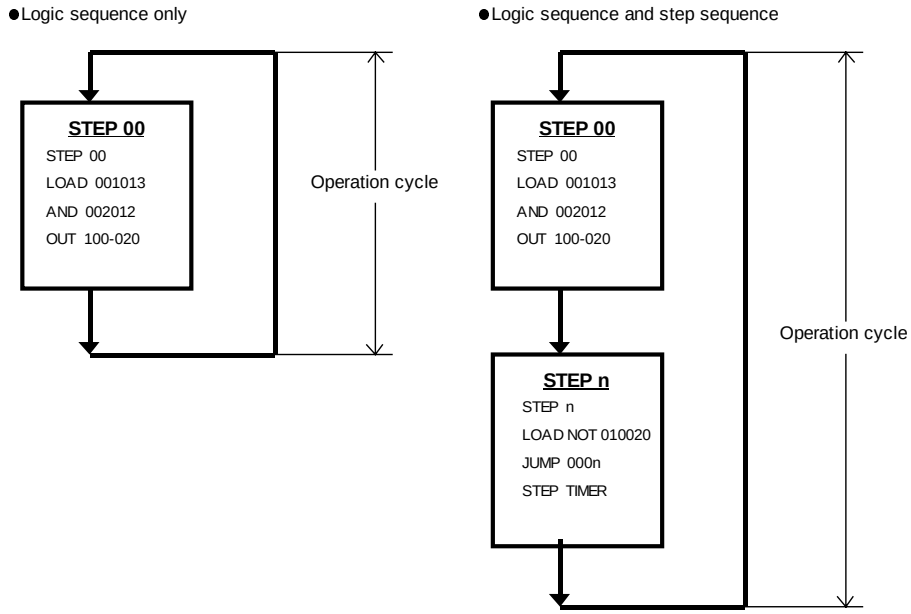

Note 3 The minimum resolution (accuracy) of the step timer of the Timer block (Block Model 205), ON/OFF Timer block (Block Model 206), and the Step Ladder Program block (Block Model 301) is the same as the operation cycle set to ITEM004.

3-2-8-1 Relationship between inter-function block connections and operation cycle

Even if data connections are made between function blocks having different operation cycles, the inputs and outputs of each function block are refreshed according to the operation cycle of the self node.

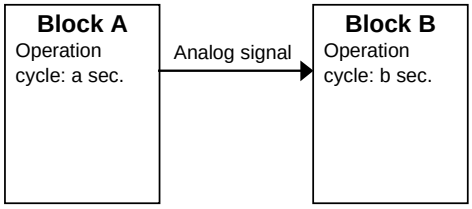

In the figure on the left, block A updates and outputs analog signals at an operation cycle of a seconds, whereas block B inputs the analog signals at an operation cycle of b seconds.

Note For example, if the output of function blocks having an operation cycle of 0.1 seconds is connected to function blocks having an operation cycle of one second, the 1-second function blocks accept data after 10 operations of the 0.1 second function blocks.

Even if the operation cycles are synchronized, the order of operation of the function blocks does not necessarily match the connection order in the software wiring. (In the above example, function block B does not necessarily follow function block A.) For details, see *3-2-9 Order of Operations* below.

3-2-9 Order of Operations

The operation of function blocks is executed in 1) order of operation groups fixed in the system and 2) order of block addresses in each operation group in function blocks (having the same operation cycle).

Operation groups fixed in the system are executed in order of the following function block categories:

1, 2, 3…

1. System Common blocks
2. Input-only terminals (DI Terminals, AI Terminals) on Field Terminal, mixed input and output terminals (DI/DO Terminals, AI/AO Terminals…∗1)
3. Receive from all nodes on the Node Terminals
4. Receive terminals of CPU Unit Terminal (DI Terminal from CPU Unit, AI Terminal from CPU Unit), and receive terminals of Expanded CPU Unit Terminal (DI Terminal from Expanded CPU Unit, AI Terminal from Expanded CPU Unit), Receive All Blocks
5. Operation blocks (for example, Alarm/Signal restrictions/Hold, Arithmetic, Function, Time Function, Signal Selection/Switching, ITEM Setting, Pulse Train Operation, other and sequence operation)
6. Step Ladder Program
7. Control blocks, External Controller Terminals
8. Output-only terminals (DO Terminal, AO Terminal) on Field terminals
9. Send to Computer terminals on Node Terminals
10. Send from all nodes on Node Terminals
11. Send terminals (DO Terminal from CPU Unit, AO Terminal from CPU Unit) on CPU Unit Terminals, send terminals (DO Terminal from Expanded CPU Unit, AO Terminal from Expanded CPU Unit) on Expanded CPU Unit Terminals, Send All Blocks

∗1: In the case of mixed input and output terminals, input processing is executed alternatively with output processing at each single operation cycle. For this reason, twice the operation cycle of preset operation cycles is required when compared with input-only and output-only processes.

Operations are executed in order of block address within each group.

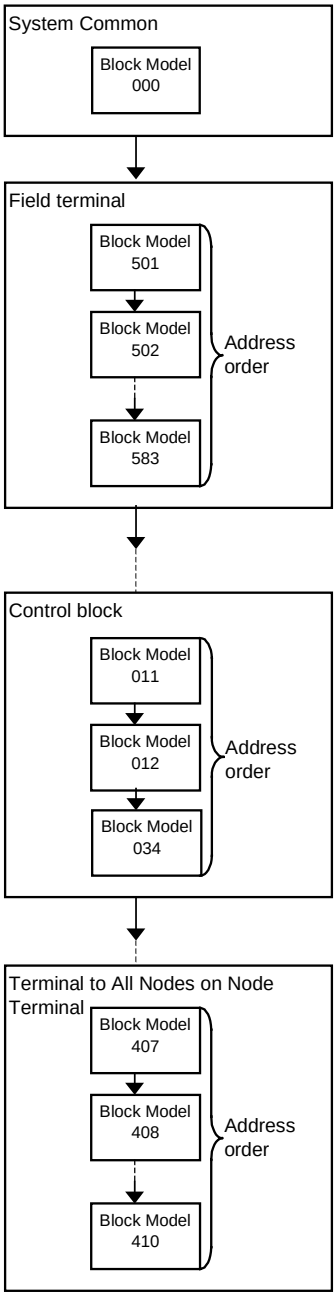

Note 1 Even if the operation cycle is synchronized, the order of operations in function blocks is the operation execution order shown above. So, the operation order is not necessarily the same as the internal connection order in the software wiring. For example, the connection is as follows when the internal connection is analog input block, square root block, PID operation block, non-linear block and then analog output block:

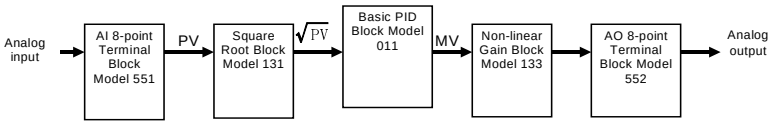

The execution order is as follows:

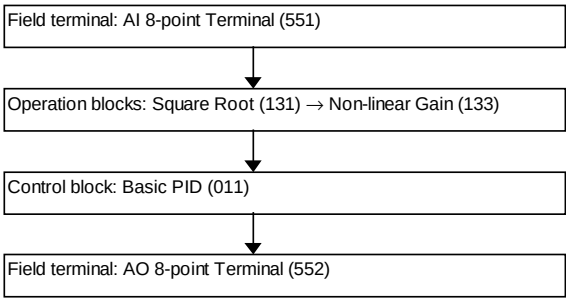

Note 2 Though "non-linear" is after "basic PID" in the software wiring, it becomes after "square root" in the operation order. For this reason, the MV value from "basic PID" one operation cycle before is calculated in a non-linear manner.

3-2-10 About Load Rate

The minimum operation cycle of each of the function blocks on the Loop Control Unit can be set to 0.1 seconds. However, when many function blocks are used, the processing capability of the Loop Control Unit prevents processing at the specified operation cycle. For this reason, the Loop Control Unit is provided with the "load rate" concept as an indicator of its processing capability. This load rate is one condition for determining the operation cycle of the function blocks. (See *3-2-8 Conditions for Determining the Operation Cycle* on page 96.)

The "load rate" is obtained by dividing the "time up to the idling period of entered after actual execution of all function blocks of a group having a certain operation cycle has ended" by the set operation cycle.

The actual operation execution cycle is a total of the following two times:

(1) Overhead time (FINS command communications and internal processing)

(2) Total operation execution time of each function block in the same operation cycle group

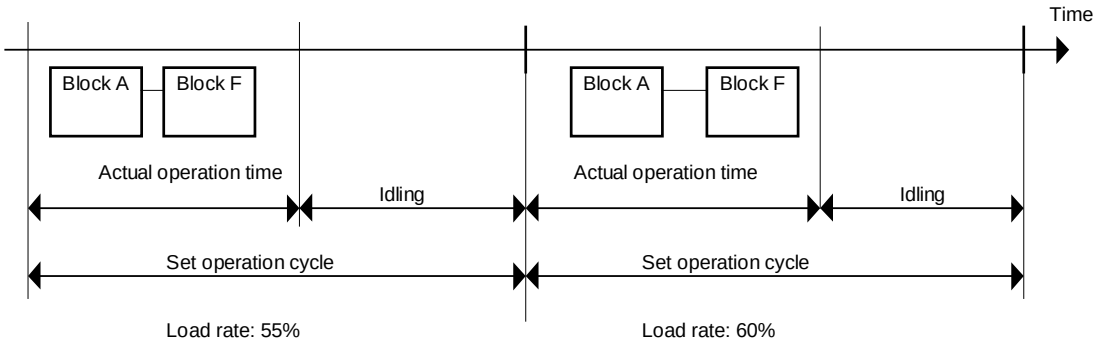

3-2-10-1 Evaluating the load rate at the system design stage

The guideline load rate for function blocks on the Loop Control Unit is 60%. At the system design stage study whether or not the load rate of each function block is 60% or less.

Though errors caused by PID and other operations do not occur when the load rate exceeds 60%, use the Loop Control Unit at a load rate of 60% or lower as there is possibility that the load rate will temporarily increase due to fluctuations in the overhead time of FINS command communications and internal processing.

Operation cycle group	Guideline load rate
0.1 sec.	60%
0.2 sec.	
0.5 sec.	
1 sec.	
2 sec.	

Errors in PID and other operations occur when the load rate exceeds 100%.

When the load rate of a certain operation cycle group exceeds 60%, change the operation cycle of function blocks among function blocks within that group, for which an increased operation cycle will not affect the application, to a longer operation cycle (group).

If it is estimated that an operation cycle longer than this cannot be set when the load rate exceeds 60%, add on another Loop Control Unit (up to three Loop Control Units can be mounted on a single PC) and distribute processing between the mounted Units.

Use the following as a guideline to estimate the load rate of the Loop Control Unit at the system design stage.

3-2-10-2 How to calculate the load rate

Calculate the load rate based on the following formula. The formula is purely a guideline, and calculated values may differ from actual measured values.

1) When all operation cycles are the same

Formula: Load rate = sum (ms) of operation execution times of each function block ÷ operation cycle (ms) x 100 + fixed load rate (%)

Note 1 The fixed load rates are as follows:

Operation cycle	Fixed load rate
0.1 sec.	10%
0.2 sec.	5%
0.5 sec.	2%
1 sec.	1%
2 sec.	0%

Note 2 The "total operation execution time of each function block" the total of the "operation execution time of the function blocks + the execution time of the sequence commands." (Values less than 10ms are discarded.)

Note 3 The resolution of load rate measurement is 10 ms. (Values less than 10ms are discarded.)

The readout value resolutions for each operation cycle are as follows:

Operation cycle	Readout resolution
0.1 sec.	10%
0.2 sec.	5%
0.5 sec.	2%
1 sec.	1%
2 sec.	1%

For details of the operation execution times for each of the function blocks and sequence commands in the Step Ladder Program, see *Appendix 3 List of Operation Execution Times*. After calculating the total (ms) operation execution time of each function block based on these tables, take the value obtained by discarding any value less than 10 ms as the "sum (ms) of operation execution times of each function block" in the guideline formula.

Example Function blocks used:

- Function blocks for single control loops:
  AI 8-point Terminal (Block Model 584) → First-order Lag (Block Model 141) → Basic PID (Block Model 0110 → AO 8-point Terminal (Block Model 585) → 1-Block Send Terminal to Computer (Block Model 403) (Basic PID is sent by CX-Process Monitor)
- Other function blocks:
  Step Ladder Program (Block Model 301):
  Executed at all times only at STEP00. The ratio of differentiated commands (DIFD, DIFU) is 5% of all commands as the command type. 50 commands per Step Ladder Program block are allowed.

Value of load rates according to calculation formula

As the load rates are as follows AI 8-Point Terminals: 0.51 ms, First-order Lag: 0.46 ms, Basic PID: 1.61 ms, AO 8-point Terminals: 1.44 ms, and 1-Block Send Terminal to Computer: 2.12 ms, the sum of operation execution times of each function block becomes 6.14 ms. For this reason, the load rate becomes 6.14 x n (ms) for a number of loops n.

When all operation cycles are one second, and the number of loops is four, the sum of operation execution times of each function block becomes 6.14 x 4 = 24.56 ms. As the measurement resolution is 10 ms (values less than 10ms are discarded), the sum becomes 20 ms.

Therefore, the load rate becomes:

20 ms ÷ 1000 x 100 + 1% = 2 + 1 = 3%

Actual measured load rate value

The actual measured load rate value is as follows according to the number of control loops and number of Step Ladder Program commands under the above conditions.

The actual measured load rate values at an operation cycle of one second are as follows:

Number of loops	Number of step ladder program commands		
	0	200	1000
1	2%	6%	24%
2	2%	6%	24%
4	3%	7%	25%
8	6%	10%	28%
16	10%	14%	32%
32	21%	25%	43%

Note The load rate value at an operation cycle other than one second becomes the value obtained by converting by the operation cycle ratio according to the above calculation formula (for example, twice that of the 1-second operation cycle at an operation cycle of 0.5 seconds).

Restrictions in the number of usable loops

The relationship between the number of loops and operation cycle is restricted in a fixed manner as the load rate must be 60% or less.

In most cases, the number of loops is as follows when a Step Ladder Program is not used:

Operation cycle	Number of loops
0.1 sec.	Max. 8
0.2 sec.	Max. 16
0.5 sec.	Max. 32
1 sec.	
2 sec.	

2) When mixed operation cycles are used

Procedure 1: For each operation cycle, the total operation execution time (ms)*1 of each function block is calculated by the formula in the table below.

*1 The total operation execution time of each function block is operation execution time of function block + sequence command execution time.

Where

Total operation execution time of function block at 0.1 sec operation cycle (ms) + 10 ms = T1,

Total operation execution time of function block at 0.2 sec operation cycle (ms) + 10 ms = T2,

Total operation execution time of function block at 0.5 sec operation cycle (ms) + 10 ms = T5,

Total operation execution time of function block at 1 sec operation cycle (ms) + 10 ms = T10,

Total operation execution time of function block at 2 sec operation cycle (ms) + 10 ms = T20

Operation cycle	Total operation execution time of each function block
0.1 sec.	T1
0.2 sec.	Where T2 ÷ 100 ms = A, (integer part of A) x T1 + T2
0.5 sec.	Where T5 ÷ 100 ms = A and T5 ÷ 200 ms = B, (integer part of A) x T1 + (integer part of B) x T2 + T5
1 sec.	Where T10 ÷ 100 ms = A, T10 ÷ 200 ms = B, and T10 ÷ 500 ms = C, (integer part of A) x T1 + (integer part of B) x T2 + (integer part of C) x T5 + T10
2 sec.	Where T20 ÷ 100 ms = A, T20 ÷ 200 ms = B, T20 ÷ 500 ms = C, and T20 ÷ 1000 ms = D, (integer part of A) x T1 + (integer part of B) x T2 + (integer part of C) x T5 + (integer part of D) x T10 + T20

Example

Where

T1 (total operation execution time of function block at 0.1 sec operation cycle) + 10 ms = 20 ms, T2 (total operation execution time of function block at 0.2 sec operation cycle) + 10 ms = 30 ms, T5 (total operation execution time of function block at 0.5 sec operation cycle) + 10 ms = 60 ms, T10 (total operation execution time of function block at 1 sec operation cycle) + 10 ms = 110 ms and T20 (total operation execution time of function block at 2 sec operation cycle) + 10 ms = 40 ms

Operation cycle	Total operation execution time of each function block
0.1 sec.	20 ms
0.2 sec.	As 30 ms ÷ 100 ms = 0.3 (A), 0 (integer part of A) x 20 ms + 30 ms = 30 ms
0.5 sec.	As 60 ms ÷ 100 ms = 0.6 (A), and 60 ms ÷ 200 ms = 0.3 (B), 0 (integer part of A) x 20 ms + 0 (integer part of B) x 30 ms + 60 ms = 60 ms
1 sec.	As 110 ms ÷ 100 ms = 1.1 (A), 110 ms ÷ 200 ms = 0.55 (B), and 110 ms ÷ 500 ms = 0.22 (C), 1 (integer part of A) x 20 ms + 0 (integer part of B) x 30 ms + 0 (integer part of C) x 60 ms + 110 ms = 130 ms
2 sec.	As 40 ms ÷ 100 ms = 0.4 (A), 40 ms ÷ 200 ms = 0.2 (B), 40 ms ÷ 500 ms = 0.08 (C), and 40 ms ÷ 1000 ms = 0.04 (D), 0 (integer part of A) x 20 ms + 0 (integer part of B) x 30 ms + 0 (integer part of C) x 60 ms + 0 (integer part of D) x 110 ms + 40 ms = 40 ms

Procedure 2: The load rate of each operation cycle is calculated by the formula below.

Formula:

Load rate of each operation cycle = Total operation execution time (ms) of each function block above ÷ operation cycle (ms) x 100

The load rate of each operation cycle must be 60% or less.

Note The resolution of load rate measurement is 10 ms (the value smaller than 10 ms is discarded).
The resolution of display value according to operation cycle is as follows.

Operation cycle	Resolution of display value
0.1 sec.	10%
0.2 sec.	5%
0.5 sec.	2%
1 sec.	1%
2 sec.	1%

Example

Load rate at 0.1 sec. = 20 ms ÷ 100 ms x 100 = 20% (acceptable as it is smaller than 60 %)

Load rate at 0.2 sec. = 30 ms ÷ 200 ms x 100 = 15% (acceptable as it is smaller than 60%)

Load rate at 0.5 sec. = 60 ms ÷ 500 ms x 100 = 12% (acceptable as it is smaller than 60%)

Load rate at 1 sec. = 130 ms ÷ 1000 ms x 100 = 13% (acceptable as it is smaller than 60%)

Load rate at 2 sec. = 40 ms ÷ 2000 ms x 100 = 2% (acceptable as it is smaller than 60%)

3-2-10-3 Monitoring the load rate at the trial operation stage

At the trial operation stage, monitor which value the load rate actually reaches at the preset operation cycle(s) on CX-Process Monitor.

Follow the procedure below to monitor the load rate.

1, 2, 3…

1. Download the function block data to the Loop Control Unit.
2. Start running of the Loop Control Unit using CX-Process Tool or by turning the PC power OFF then back ON again.
3. Establish the connection to CX-Process Monitor, and select [Operation]-[Run monitor status] from the [Execute] menu.

   The following load rates (current load rate and maximum load rate) are displayed in the Run monitor status screen:

   Each of the current load rates and maximum load rates for the system common operation cycle and each of the 0.1 sec./0.2 sec./0.5 sec./1 sec./2 sec. operation cycle groups

   If the maximum load rate of a certain operation cycle group exceeds 60%, change the operation cycle of function blocks among function blocks within that group, for which an increased operation cycle will not affect the application, to a longer operation cycle (group).

   If it is estimated that an operation cycle longer than this cannot be set when the load rate exceeds 60%, add on another Loop Control Unit (up to three Loop Control Units can be mounted on a single PC) and distribute processing between the mounted Units.

3-2-10-4 Automatic operation cycle switching function

When the load rate exceeds 100%, all function blocks within that group are executed even if the preset operation cycle is exceeded. In the figure below, function block F is executed even though the preset operation cycle is exceeded. (Note, however, that an error will occur in PID and other operations.)

When the load rate exceeds 70% continuously for ten times, the operation cycle is automatically switched to the next longer cycle. (In other words, ITEM004 of that function block is automatically changed to an updated operation cycle.) When the operation cycle is automatically switched, the state of the Operation Cycle Automatic Switching Generator flag of each of ITEMs ITEM053, ITEM056, ITEM059, ITEM062, ITEM065 and ITEM065 of the System Common block (Block Model 000) changes from 0 to 1 and is latched. Once the state of the Operation Cycle Automatic Switching Generator flag turns 1, it will not return to 0 unless the corresponding ITEM of the System Common block (Block Model 000) is manually reset on CX-Process Tool. Also, once the state of the Operation Cycle Automatic Switching Generator flag turns 1, it will remain 1 even if a longer operation cycle is automatically switched to.

Note When the load rate of the 2-second operation cycle exceeds 70% continuously for ten times, the state of the Operation Cycle Automatic Switching Generator flag turns 1, and running of all function blocks is automatically stopped. If this happens, add on another Loop Control Unit, and distribute processing between the Units.

The Operation Cycle Automatic Switching Generator flag can be monitored using the Monitor run status screen of CX-Process Tool. Select [Operation]-[Monitor run status] from the [Execute] menu.

3-2-11 External I/O Refresh Cycle on the Overall System

The Loop Control Unit exchanges field I/O values (analog input values, analog output values, contact inputs and contact outputs) with external Units by the following method.

1. The Analog Input/Output Unit or the Basic I/O Unit refresh the I/O memory on the CPU Unit.
2. The Loop Control Unit exchanges data allocated to I/O memory on the CPU Unit according to the operation cycle of each function block.

Example Data exchange of analog input, PID operation and analog output

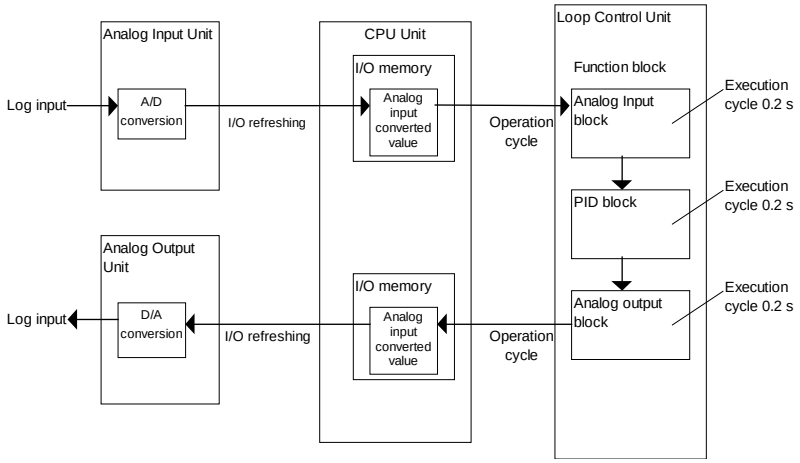

"External I/O refresh cycle on the overall system" here (simply called the "external I/O refresh cycle" from here on) refers to the time up to when PID operation is performed and the Analog Input/Output Unit outputs the analog output values after the Analog Input Unit starts to read analog input values. (This fresh cycle indicates the response of the overall system.)

Note This "external I/O refresh cycle" is equivalent to the I/O refresh cycle (or operation cycle) on a general controller. For this reason, when designing the system, calculate this "external I/O refresh cycle" according to the calculation formula shown below, and study whether or not there will be any problem in controllability on the target application. In most cases, the maximum "external I/O refresh cycle" is as follows depending on the timing of operations:

"about five times the cycle time of the CPU Unit" + "twice the operation cycle of the function blocks on the Loop Control Unit"

In particular, study whether or not there will be any problem in controllability of PID control in the case of fast-response control targets such as pressure or flowrate.

Calculate the external I/O refresh cycle by the following calculation formula:

3-2-11-1 Maximum external I/O refresh cycle

The maximum external I/O refresh cycle is calculated as follows:

A/D conversion time + (4 x CY) + (α x CY) + (2 x T) + (β x T) + 20 + D/A conversion time

where,

CY: Cycle time of the CPU Unit

T: Max. operation time (∗1)

α: Coefficient of the total number of function blocks exchanging data with the CPU Unit (∗2)

β: Smallest integer satisfying formula 1(∗3)

∗1: Longest operation cycle in the function block group comprising the loop

∗2: α is as follows depending on the total number of Field Terminals + CPU Unit Terminals + Expanded CPU Unit Terminals + Node Terminals + Send/Receive All Blocks (α is incremented by 1 at every 19 Terminals.)

Total number of nodes (Field Terminal + CPU Unit Terminal + Expanded CPU Unit Terminal + Node Terminal + Send/Receive All Blocks)	α
0 to 18	1
19 to 38	2
39 to 58	3
⋮	
259 to 278	14

∗3: β is the smallest integer satisfying formula 1 below.

Formula 1:

$\{CY \times (\alpha+2) + 20\} \div T - 0.7 < \beta$

Note 1 +T (operation cycle) is further added when analog values are input and output at AI/AO Terminals using a combination of Analog Input and Analog Output Units for all Loop Control Units of version 2.00 or earlier. This value is not added for Loop Control Units of version 2.50 or later.

Note 2 Calculate CY (cycle time) in 10 ms even if the actual cycle time is less than 10 ms.

Example Cycle time of 15 ms, max. operation cycle of 0.2 seconds (200 ms), 50 function blocks (α = 3) exchanging data with the CPU Unit, A/D conversion time = 8 ms, D/A conversion time = 8ms, Analog Input Unit and Analog Output Units are separate units

$\beta = 0$ as $(15 \times 5 + 20) \div 200 - 0.7 = -0.225 < \beta$

Therefore, in this example, the maximum I/O refresh cycle becomes as follows:

8 ms + (4 x 15 ms) + (3 x 15 ms) + (2 x 200 ms) + (0 x 200 ms) + 20 ms + 8 ms = 541 ms

3-2-11-2 Minimum external I/O refresh cycle

The minimum external I/O refresh cycle is calculated as follows:

A/D conversion time + (1 x CY) + (α x CY) + (1.6 x T) + (β x T) + D/A conversion time

where,

CY: Cycle time of the CPU Unit

T: Max. operation time (∗1)

α: Coefficient of the total number of function blocks exchanging data with the CPU Unit(∗2)

β: Smallest integer satisfying formula 1(∗3)

∗1: Longest operation cycle in the function block group comprising the loop

∗2: α is as follows depending on the total number of Field Terminals + CPU Unit Terminals + Expanded CPU Unit Terminals + Node Terminals + Send/Receive All Blocks (α is incremented by 1 at every 19 Terminals.)

Total number of nodes (Field Terminal + CPU Unit Terminal + Expanded CPU Unit Terminal + Node Terminal + Send/Receive All Blocks)	α
0 to 18	1
19 to 38	2
39 to 58	3
⋮	
259 to 278	14

∗3: β is the smallest integer that satisfying formula 1 below.

Formula 1:

$CY \times \alpha \div T - 0.9 < \beta$

Note 1 +T (operation cycle) is further added when analog values are input and output at AI/AO Terminals using a combination of Analog Input and Analog Output Units for all Loop Control Units of version 2.00 or earlier. This value is not added for Loop Control Units of version 2.50 or later.

Note 2 Calculate CY (cycle time) in 10ms even if the actual cycle time is less than 10 ms.

Example Cycle time of 15 ms, max. operation cycle of 0.2 seconds (200 ms), 50 function blocks (α = 3) exchanging data with the CPU Unit, A/D conversion time = 1 ms, D/A conversion time = 1 ms, Analog Input Unit and Analog Output Units are separate units

$\beta = 0$ as $15 \times 3 \div 200 - 0.9 = -0.675 < \beta$

Therefore, in this example, the minimum I/O refresh cycle becomes as follows:

1 ms + (1 x 15 ms) + (3 x 15 ms) + (1.6 x 200 ms) + (0 x 200 ms) + 1 ms = 382 ms

3-2-11-3 Restrictions on operation cycles of function blocks used for data exchange with the CPU Unit

In the case of the following function blocks that perform data exchange with the CPU Unit, the operation cycle must satisfy formula 1 shown below. If this formula is not satisfied, cases where data exchange with the CPU Unit is not performed and data exchange processing does not end when operation on those function blocks is executed may occur. If this happens, the external I/O refresh cycle must be increased.

Target function blocks: Field Terminal
CPU Unit Terminal
Expanded CPU Unit Terminal
Node Terminal

In most cases, the operation cycle of these function blocks must be at least 3.3 times the cycle time of the CPU Unit.

Formula 1: CY x (α+2) < Operation cycle of above function blocks x 0.9

where,

CY: Cycle time of CPU Unit

α is as follows depending on the total number of Field Terminals + CPU Unit Terminals + Expanded CPU Unit Terminals + Node Terminals + Send/Receive All Blocks (α is incremented by 1 at every 19 Terminals.)

Total number of nodes (Field Terminal + CPU Unit Terminal + Expanded CPU Unit Terminal + Node Terminal + Send/Receive All Blocks)	α
0 to 18	1
19 to 38	2
39 to 58	3
⋮	
259 to 278	14

Example In case of a cycle time of 25 ms, total number of Terminals 50 (Field Terminal + CPU Unit Terminal + Expanded CPU Unit Terminal + Node Terminal + Send/Receive All Blocks), set the operation cycle to 0.2 seconds or more as CY x (1+3) = 100 ms is less than operation cycle x 0.9 and the operation cycle is greater than approx. 111 ms.

Note 1 Precautions When Using the Analog Input/Output Unit

The unit number set on the front panel of the unit must always match the unit number setting of the Field Terminals.

When running of the Loop Control Unit is started using the Field Terminals, the Loop Control Unit executes the following writing on the allocated CIO area of the unit number specified by the Field Terminals.

1) Analog values are written on the allocated CIO area of the analog output data on the Analog Output Unit and Analog Input/Output Unit.

2) Writing is performed internally on the leading words (n) of the allocated CIO area on the Analog Output Unit and Analog Input/Output Unit.

   For this reason, if the wrong unit number on the Field Terminals is set, the wrong data will be written to the allocated CIO area of the Special I/O Unit having that unit number, and may cause the overall PC system to malfunction.

   Before starting running of the Loop Control Unit, first make sure that the unit number on the Field Terminals matches that set on the front panel of the Analog Input/Output Unit.

Field Terminals that undergo writing by the Loop Control Unit

Model	Function block name	Target Analog Input/Output Unit	Internal writing by Loop Control Unit	Writing of analog values
552	AO 8-point Terminal (DA003/4)	C200H-DA003/004	00FF Hex is stored to leading allocated word (n).	Analog value is stored to allocated area n+1 to n+8.
553	AI 2-point/Ao 2-point Terminal (MAD01)	C200H-MAD01	0003 Hex is stored to leading allocated word (n).	Analog value is stored to allocated area n+1 to n+2.
583	AI 4-point/Ao 4-point Terminal (MAD44)	CS1W-MAD44	000F Hex is stored to leading allocated word (n).	Analog value is stored to allocated area n+1 to n+4.
563	AO 4-point Terminal (PMV01)	CS1W-PMV01 (isolated-type control output)	None	Analog value is stored to allocated area n+1 to n+4.
585	AO 8-point Terminal (DA08V/C)	CS1W-DA08V/C	00FF Hex is stored to leading allocated word (n).	Analog value is stored to allocated area n+1 to n+8.
587	AO 4-point Terminal (DA041)	CS1W-DA041	000F Hex is stored to leading allocated word (n).	Analog value is stored to allocated area n+1 to n+4.

Note 2 Field Terminals that do not undergo writing by the Loop Control Unit

Model	Function block name	Target Analog Input/Output Unit	Internal writing by Loop Control Unit	Writing of analog values
551	AI 8-point Terminal (AD003)	C200H-AD003	None	None
561	AI 4-point Terminal (PTS01/02/03, PDC01, PTW01)	CS1W-PTS01 (isolated-type thermocouple input), CS1W-PTS02/03 (isolated-type temperature-resistance thermometer), CS1W-PDC01 (isolated-type analog input), CS1W-PTW01 (2-wire transmitter input)		
562	AI 4-point Terminal (PPS01)	CS1W-PPS01 (isolated-type pulse input)		
564	AI 8-point Terminal (PTR01/02)	CS1W-PTR01 (Power Transducer Input Unit), CS1W-PTR02 (analog input 100 mV)		
584	AI 8-point Terminal (AD081)	CS1W-AD081		
586	AI 4-point Terminal (AD041)	CS1W-AD041		

When Analog Output Units C200H-DA003/004, CS1W-DA08V/C or CS1W-DA041 and Analog Input/Output Unit C200H-MAD01 or CS1W-MAD44 are used

When the operation mode of the CPU Unit changes from RUN or MONITOR to PROGRAM, the Conversion Enable flag of the Analog Output Unit and the Analog Input/Output Unit is turned OFF from the CPU Unit, and the output hold function holds analog output values at the previous value, minimum value or maximum value.

The Loop Control Unit forcibly turns this Conversion Enable flag ON when the Unit is in use.

However, when the CPU Unit changes to the PROGRAM mode, the Conversion Enable flag momentarily (operation cycle of Loop Control Unit) turns OFF, and as a result the analog output value is momentarily switched to the momentary output hold value.

To prevent the analog output value from being switched to the momentary output hold value when the CPU Unit changes to the PROGRAM mode, set the I/O Memory Hold flag (A50012) of the CPU Unit to ON, and set "Hold ON/OFF of I/O Memory Hold flag at power ON" to ON in the PC system settings.

When isolated-type Control Output Unit CS1W-PMV01 is used

Isolated-type Control Output Units do not have a Conversion Enable flag. Disabling of conversion is indicated by the setting of the allocated Data Memory area. As the default setting, conversion is executed, and analog output values are refreshed and output. Conversion is executed at all times as long as it is not disabled by this allocated Data Memory area (except by a CPU Unit fatal error).

However, when the CPU Unit changes to the PROGRAM mode, the analog output value momentarily (operation cycle of Loop Control Unit) turns OFF, and as a result, the analog output value is momentarily switched to the lower limit (minimum) value.

To prevent the analog output value from being switched to the lower limit (minimum) value when the CPU Unit changes to the PROGRAM mode, set the I/O Memory Hold flag (A50012) of the CPU Unit to ON, and set "Hold ON/OFF of I/O Memory Hold flag at power ON" to ON in the PC system settings.

3-3 Exchanging Data with the CPU Unit

The Loop Control Unit exchanges the following two types of data with the CPU Unit:

1. Mutual exchange of run status
2. Exchange of any data

3-3-1 Mutual Exchange of Run Status

The run status of the Loop Control Unit and the CPU Unit can be monitored mutually by the following two areas:

- Allocated CIO area for CPU Bus Unit: Run status of Loop Control Unit is sent to the CPU Unit.
- System Common blocks (Block Model 000): Run status of the CPU Unit is sent to the Loop Control Unit.

Note The system information and Node Terminal data are also reflected in the Data Memory for the Node Terminals. These data, however, are exclusively for CX-Process Monitor.

3-3-1-1 Run status of CPU Unit

The run status of the CPU Unit is reflected in ITEM007 to ITEM011 and ITEM13 of the System Common block at all times. For this reason, the required processing can be executed on the Loop Control Unit by the Step Ladder Program block (Block Model 301) or other blocks based on the contact output of the System Common block.

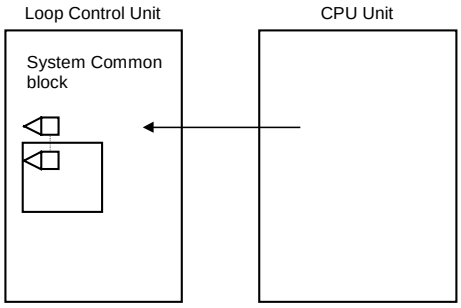

CPU Unit run status in System Common block

ITEM	1 (ON)	0 (OFF)
007	Fatal error (fatal error detected by system self-diagnostics or execution of FALS instruction)	Not fatal error
008	CPU Unit running (RUN mode or MONITOR mode)	Stopped (PROGRAM mode or fatal error)
009	Output OFF (Auxiliary Area A50015 turns ON.)	Not output OFF
010	RUN mode	Not RUN mode
011	MONITOR mode	Not MONITOR mode
013	PROGRAM mode	Not PROGRAM mode

To perform processing on the Loop Control Unit according to the run status of the CPU Unit

To perform specific processing on the Loop Control Unit according to the run status of the CPU Unit, use the Step Ladder Program block to perform the required processing taking the following run status (ITEM007 to ITEM011, ITEM013) of the System Common block as the input conditions.

Example To indicate stop when the CPU Unit is in the PROGRAM mode

To forcibly stop running of the Loop Control Unit when the CPU Unit is in the PROGRAM mode, input ITEM013 (PROGRAM mode) of the System Common block (Block Model 000) as the run status of the CPU Unit, and set ITEM014 (run/stop command) of the System Common block to 0 (stop) by the Step Ladder Program block (Block Model 301) and the ITEM Setting blocks (Block Models 171 and 172).

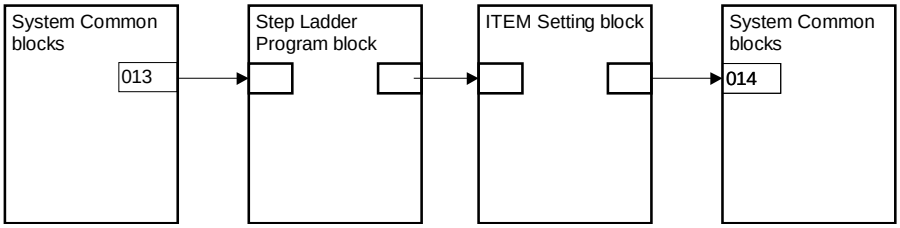

Note When ITEM014 (run/stop command) of the System Common block is set to 0, the Loop Control Unit will not start to run as it is even if the CPU Unit operation mode is set to RUN or MONITOR. To resume running of the Loop Control Unit, ITEM014 (run/stop command) of the System Common block must be set to either 1 (hot start) or 0 (cold start).

Example To indicate switching to the preset MV value of PID control or MV hold in the System Common block

Likewise, to forcibly set the MV (manipulated variable) to a specific value from the Advanced PID block when the CPU Unit is in the PROGRAM mode, input ITEM013 (PROGRAM mode) of the System Common block as the run status of the CPU Unit, and set the preset MV switch (ITEM080) or the MV hold switch (ITEM082) of the Advanced PID block to ON.

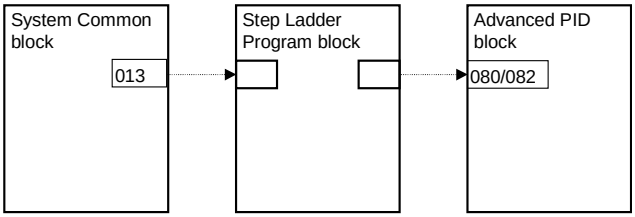

3-3-1-2 Run status of Loop Control Unit

The run status of the Loop Control Unit is reflected at all times in bits 00 to 05 of the leading word n of the allocated CIO area (25 words per Unit within the range 1500 to 1899 words are occupied according to the unit number) on the CPU Bus Unit. For this reason, the required processing can be executed by the Step Ladder Program of the CPU Unit taking this run status as the input conditions.

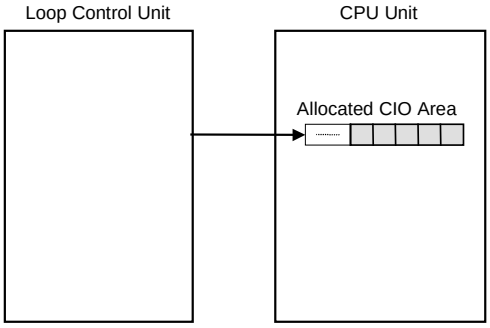

Note On the Loop Control Unit, the refresh timing of the allocated relay n words for the CPU Bus Unit is not the I/O refresh timing of the CPU Unit, but the refresh timing of the 1 sec operation cycle (fixed).

Allocated CIO area nth Word on CPU Bus Unit

n = 1500 + unit number x 25

Bit	1 (ON)	0 (OFF)	Explanation
00	Loop Control Unit running	Loop Control Unit stopped	This bit informs the CPU Unit whether or not the Loop Control Unit is running.
01	PV error input ON	PV error input OFF	This bit informs the CPU Unit whether ITEM018 (PV error input) of the Basic PID block (Block Model 011) or the Advanced PID block (Block Model 012) is ON or OFF. Basically, ITEM018 (PV error input) specifies the output from disconnected line detection contact ITEM of the Analog Input Unit as the source designation.
02	MV error input ON	MV error input OFF	This bit informs the CPU Unit whether ITEM090 (MV error input) of the Basic PID block (Block Model 011) or the Advanced PID block (Block Model 012) is ON or OFF. Basically, ITEM090 (MV error input) specifies the output from disconnected line detection contact ITEM of the Analog Output Unit as the source designation.
03	Execution error (error code other than 0)	No execution error (error code 0)	This bit informs the CPU Unit that execution of the function block ended in error when ITEM003 (execution error indication) of one or more of the function blocks is other than 0 (normal). For details of execution errors (error codes other than 0) and how to remedy execution errors, see *7-1 Errors and Alarm Troubleshooting*.
04	Function block database error	No function block database error	This bit informs the CPU Unit that the function block data in RAM on the Loop Control Unit has been corrupted by a low battery voltage, for example. For details of LED lighting at this time, see *7-1 Errors and Alarm Troubleshooting*. When this error occurs, either initialize RAM using CX-Process Tool, or re-set the function block in question.
05	Battery error	No battery error	This bit informs the CPU Unit whether the battery voltage has fallen or the battery is not inserted when pin 2 of the DIP switch is OFF. Check the battery connection. Replace the battery if the connection is normal. For details on how to replace the battery, see *7-2 Maintenance*.
15	Function block changed (Download by function block) (See note.)	No function block changed (Not downloaded by function block or hot or cold start)	Notifies the CPU Unit when a function block has been downloaded from the CX-Process Tool while the Loop Control Unit is running. Monitor this bit from the ladder program in the CPU Unit to detect changes to function blocks and perform suitable processing (e.g., notification).

Note: If files are downloaded from the CS-Process Tool in major item units (units of Loop Control Unit), the Loop Control Unit will stop operation. If data is downloaded in function block units, however, operation will continue. This flag is thus provided so that changed in the function blocks caused by downloading from the CS-Process can be detected to implement the necessary processing.

To perform processing from the CPU Unit according to the run status of the Loop Control Unit

So that the CPU Unit can perform specific processing (for example, changing the analog output value to a specific value) according to the run status of the Loop Control Unit, create a Step Ladder Program taking bits 00 to 05 of the leading word n of the allocated CIO area (25 words per Unit within the range 1500 to 1899 words are occupied according to the unit number) on the CPU Bus Unit as the input conditions.

Example1: To perform processing when the Loop Control Unit has stopped running

Execution of a specific process is enabled as follows when the Loop Control Unit has stopped running or a data exchange error has occurred with the CPU Unit functioning as a CPU Bus Unit:

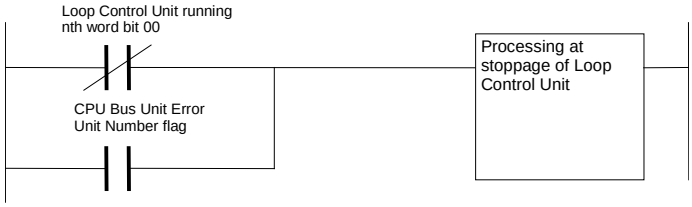

Example 2: To notify that function blocks have changed while the Loop Control Unit was running.

If a function block is changed from the CX-Process Tool during Loop Control Unit operation, notification is made by creating a warning or other indication of the change.

3-3-2 Exchanging Any Data

The Loop Control Unit can exchange data with the CPU Unit or another Loop Control Unit by either of the following two methods:

- To exchange data at all times: Use the CPU Unit Terminal block or Expanded CPU Unit Terminal block.
- To exchange data with the CPU Unit whenever necessary:

  Issue FINS commands to the Loop Control Unit using the CMND command in the user program.

Note The Loop Control Unit can use the CPU Unit Terminal block or Expanded CPU Unit Terminal block (regardless of the user program on the CPU Unit) to read and write to any I/O memory on the CPU Unit. For this reason, do not perform reading and writing in duplicate on the same I/O memory address between the Loop Control Unit and the CPU Unit.

3-3-2-1 To exchange data at all times (CPU Unit Terminal block or Expanded CPU Unit Terminal block)

The Loop Control Unit reads and writes data in any I/O memory on the CPU Unit at all times (at each operation cycle) using the CPU Unit Terminal or Expanded CPU Unit Terminal in the function block. Prepare the CPU Unit Terminal or Expanded CPU Unit Terminal on CX-Process Tool, and download the Terminal to the Loop Control Unit together with the other function blocks.

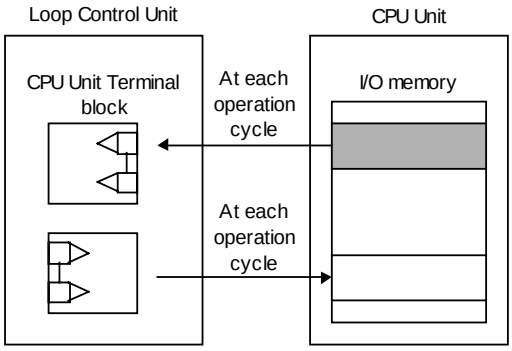

There are a total of eight CPU Unit Terminals and Expanded CPU Unit Terminals as follows:

Category	Number of points	Function block
CPU Unit terminal	128 contact inputs	DI Terminal from CPU Unit (Block Model 451)
	128 contact outputs	DO Terminal to CPU Unit (Block Model 452)
	8 word inputs	AI Terminal from CPU Unit (Block Model 453)
	8 word outputs	AO Terminal to CPU Unit (Block Model 454)
Expanded CPU Unit terminal	64 contact inputs	DI Terminal from Expanded CPU Unit (Block Model 455)
	64 contact outputs	DO Terminal to Expanded CPU Unit (Block Model 456)
	64 word inputs	AI Terminal from Expanded CPU Unit (Block Model 457)
	64 word outputs	AO Terminal to Expanded CPU Unit (Block Model 458)

The following table shows the addresses of I/O memory that can be read and written by the CPU Unit Terminal or Expanded CPU Unit Terminal.

I/O memory that can be specified by the CPU Unit Terminal or Expanded CPU Unit Terminal

Area type	CS1 Series CPU Unit I/O memory address	Remarks
CIO (channel I/O) Area	0000 to 6134 words	Including I/O Area, CompoBus/D Area, Data Link Area, Special I/O Unit Allocated Area (*1)
Work Area (W)	W000 to 511 words	
Holding Area (H)	H000 to 511 words	

Area type	CS1 Series CPU Unit I/O memory address	Remarks
Data Memory (D)	D00000 to 32767 (words)	Including Data Memory area allocated to Special I/O Unit
Extended Data Memory (E) bank No.0	E0_00000 to E0_32767	

*1 I/O memory other than the above cannot be specified.

Note The CPU Unit Terminal or Expanded CPU Unit Terminal differs from each other in the following respect besides the number of input/output points.

Category	Data exchange timing	
	DI, AI terminals	DO, AO terminals
CPU Unit terminal	Data is input at all times from the CPU Unit at each operation cycle, and contact or analog data is output at all times.	Contact or analog data is input at all times at each operation cycle, and is output to the CPU Unit at all times.
Expanded CPU Unit terminal	• When the "write at all times switch" is 0 (OFF): Data is input from the CPU Unit at all times at each operation cycle, and that data is written to ITEMs of other function blocks only when the state of the CPU Unit I/O memory has changed. • When the "write at all times switch" is 1 (ON): Data is input from the CPU Unit at all times at each operation cycle, and is written to ITEMs of other function blocks at all times.	• When the "write at all times switch" is 0 (OFF): Contact or analog data is input at all times at each operation cycle, and that data is output to the CPU Unit only when that data has changed. • When the "write at all times switch" is 1 (ON): Contact or analog data is input at all times at each operation cycle, and that data is output to the CPU Unit at all times.

Category	DI terminals	DO terminals
CPU Unit terminal	Contact data is input from the CPU Unit, and is output to the "contact input" ITEM of another function block via the Contact Distributor block (Block Model 201) or the Step Ladder Program block (Block Model 301).	The "contact output" or "contact input" ITEMs of another function block are input via the Contact Distributor block (Block Model 201) or the Step Ladder Program block (Block Model 301), and the contact data is output to the CPU Unit.
Expanded CPU Unit terminal	Contact data is input from the CPU Unit, and is output directly to the "contact input" ITEM of another function block without going via the Contact Distributor block (Block Model 201) or the Step Ladder Program block (Block Model 301).	The "contact output" or "contact input" ITEMs of another function block are specified as the source designation directly without going via the Contact Distributor block (Block Model 201) or the Step Ladder Program block (Block Model 301), and the contact data is output to the CPU Unit.

Category	AI terminals	AO terminals
CPU Unit terminal	Analog data is input from the CPU Unit and analog data is output. • Either that analog data is input at the analog input source designation on another function block, • Or that analog data is output to a parameter ITEM of another function block via the Variable ITEM Setting block (Block Model 172).	"Analog output" or "analog input" of another function blocks is input at the analog input source designation, and that analog data is output to the CPU Unit.
Expanded CPU Unit terminal	Analog data is input from the CPU Unit, and the parameter ITEMs of another function block are output with the destination specified directly without going via the Variable ITEM Setting block (Block Model 172).	"Analog output" or "analog input" of another function block or parameter ITEMs are input with the analog input source designation specified, and that analog data is output to the CPU Unit.

3-3-2-2 To exchange data with the CPU Unit whenever necessary (by the CMND command)

The CPU issues FINS command to the Loop Control Unit from CMND command within the user program to read and write Loop Control Unit data when it requires the data.

For details on FINS commands that can be issued, see *Section 6 How to Use FINS Commands*.

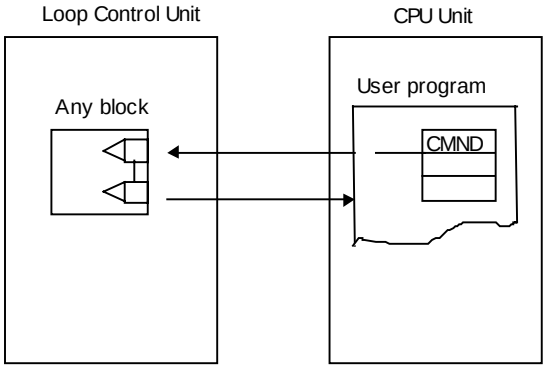

Note FINS commands can also be issued from the CPU Unit at other networked nodes.

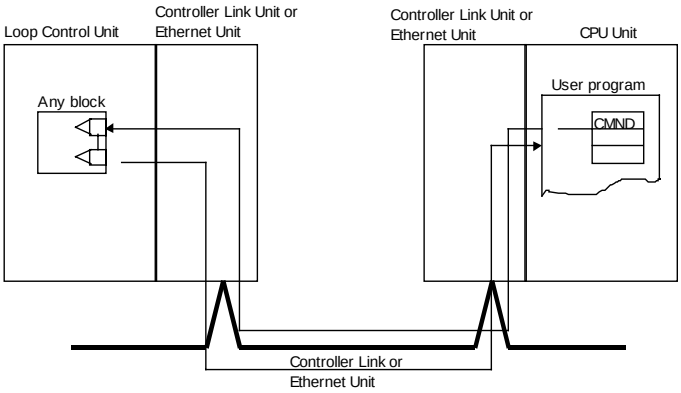

3-4 Exchanging Data with CX-Process Monitor/SCADA Software and with Other Nodes

The Loop Control Unit exchanges data with CX-Process Monitor via the Data Memory for the Node Terminals that is allocated to the CPU Unit. Also, ITEMs from the Control, Operation, and External Controller Terminal Blocks can be transferred to and from I/O memory in the CPU Unit, and from there transferred to and from commercially available SCADA software.

The Loop Control Unit can also exchange data with a Loop Control Unit at another node by using part of the regular Data Link area or going via the Data Memory for the Node Terminals.

- **Exchanging data with CX-Process Monitor:**

  The System information and Node Terminal block (allocated to the Area to send to computer) are used. (See note.)

- **Exchanging data with SCADA Software:**

  The Send All Blocks function block and Receive All Blocks function block are used to write and read ITEMs from Control, Operation, and External Controller Terminal Blocks to and from I/O memory in the CPU Unit and then the data in the I/O memory is read from SCADA software using CSV tags to specify Loop Control Unit function block ITEMs.

- **Exchanging data with the Loop Control Unit:**

  When part of the Controller Link Data Link is used:
  The CPU Unit Terminal block or Expanded CPU Unit Terminal block are used.

  When the entire Controller Link Data Link is occupied:

  The Node Terminal block (allocated to the Area to send to all nodes or Area to receive from all nodes) is used. (See note.)

Note For details, see *Appendix 2 How to Use the Node Terminal Blocks*.

3-4-1 Data Memory (D) for Node Terminals

The data in the Data Memory (D) for Node Terminals is for exchanging data with CX-Process Monitor or a Loop Control Unit at another node.

The following data must be set to the System Common block (Block Model 000) on the Loop Control Unit to achieve this function.

System Common block (Block Model 000) defaults

ITEM	Data name	Data range	Default
043	Leading address (S) of Data Memory for Node Terminals	0 to 32767	16020
042	LCU number: ID data of multiple (max. 3) Loop Control Units on CPU Rack	0 to 2	0

The following two types of data are allocated to the Data Memory (D) for the Node Terminals:

1. System information
2. Data of Node Terminal block (Area to send to computer, Area to send to all nodes, Area to receive from all nodes)

3-4-1-1 System information

System information is information such as the unit address of the Loop Control Unit and run status. This information is reflected in the 24 words (8 words per Loop Control Unit) from the leading word of the Data Memory (D) for Node Terminals when the Loop Control Unit starts to be run.

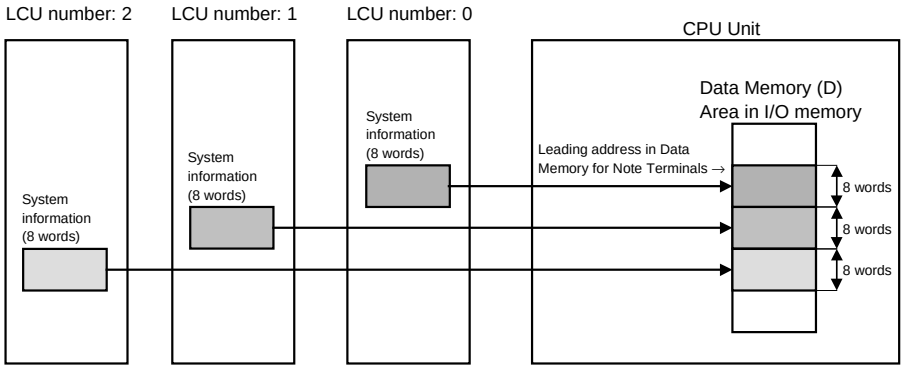

Note

- The default leading address of the Data Memory (D) for Node Terminals is D16020 or LCU number 0. Accordingly, the system information is stored to eight words of D16020 to D16027 as the default addresses when running of the Loop Control Unit is started. For this reason, when the Loop Control Unit is used at its defaults, do not use words D16020 to D16027 for other applications.
- When two or more Loop Control Units are used on the same CPU Rack, the LCU number (ITEM042) for identifying the Loop Control Unit must be set to different values for each of the Loop Control Units. Also, the leading address (ITEM043) of the Data Memory (D) for Node Terminals must be set to the same value for each of the Loop Control Units.

The following table shows the details of system information:

	Offset address	Data description	Data location		Default address in I/O memory for block address 000
			Block address	ITEM	
Role: 0	+0	Unit address	000	041	D16020
	+1	Loop Control Unit run status			D16021
	+2	CPU Unit run status		007 to 013	D16022
	≀				≀
	+7	Data update check code			D16027
Role: 1	+0	Unit address	000	041	D16028
	+1	Loop Control Unit run status			D16029
	+2	CPU Unit run status		007 to 013	D16030
	≀				≀
	+7	Data update check code			D16035
Role: 2	+0	Unit address	000	041	D16036
	+1	Loop Control Unit run status			D16037
	+2	CPU Unit operation status		007 to 013	D16038
	≀				≀
	+7	Data update check code			D16043

CX-Process Monitor inputs this system information data. The following table shows the details of each word of the system information.

Offset address	System information	Description of word bits
+0	Unit address	Unit number (0 to F Hex) of Loop Control Unit + 10 Hex are automatically stored to lower two bits. Upper two bits are 00 Hex.
+1	Loop Control Unit run status	Status is stored to the following bits in one word: Bit 00: "1" during running of Loop Control Unit, "0" in stop state Bit 01: "1" when PV error input is ON, "0" when OFF Bit 02: "1" when MV error input is ON, "0" when OFF Bit 03: "1" at execution error, "0" when normal Bit 04: "1" at function block database error, "0" when normal Bit 05: "1" at battery error, "0" when normal Bit 15: "1" when function blocks have been downloaded in function block units, "0" when function blocks have not been downloaded in functin block units or when a hot or cold start is initiated.
+2	CPU Unit run status	Status is stored to the following bits in one word: Bit 00: "1" at fatal error Bit 01: "1" when running Bit 02: "1" at output OFF Bit 03: "1" in RUN mode Bit 04: "1" in MONITOR mode Bit 05: Not used Bit 06: "1" in PROGRAM mode
+7	Data update check code (used by system)	The value itself that is to be stored is used by the system and is of no relevance for the user. (This value changes constantly when the Data Memory for the Node Terminals is being updated by the Loop Control Unit.)

3-4-1-2 Node Terminal block data

Node Terminal block data is allocated to the Data Memory for the Node Terminals following the system information.

The Node Terminal block data is exclusively for data exchange with CX-Process Monitor and with Loop Controller Units at other nodes.

The Loop Control Unit sends and receives data to and from this area by specific function blocks.

The following table describes an overview of exchange of Node Terminal block data.

Area	Description	Function blocks targeted for data exchange	Data flow direction	Communica-tions mode	Use of controller link data link
Area to send to computer	Data send area to CX-Process Monitor	DO to Computer (Block Model 401) AO to Computer (Block Model 402) 1-Block Send Terminal to Computer (Block Model 403) 4-Block Send Terminal to Computer (Block Model 404)	Function block → This area → CX-Process Monitor	Connection to CX-Process Monitor via Host Link	Not used
				Connection to CX-Process Monitor via Controller Link	Used
Area to send to all nodes	Data send area to Loop Control Unit at other node	DO Terminal to All Nodes (Block Model 407) AO Terminal to All Nodes (Block Model 408)	Function block → This area → Data Memory of other node → Loop Control Unit at other node	Data transmission via Controller Link	Used
Area to receive from all nodes	Data receive area from Loop Control Unit at other node	DI Terminal from All Nodes (Block Model 414) AI Terminal from All Nodes (Block Model 415)	Loop Control Unit at other node → Data Memory of other node → This area → Function block	Data reception via Controller Link	Used

3-4-2 Exchanging Data with CX-Process Monitor

Mechanism for reading data from CX-Process Monitor

CX-Process Monitor uses the data in the Area to send to computer on the CPU Unit to read data from the Loop Control Unit.

To send data on the Loop Control Unit to this Area to send to computer, the data to be monitored must be specified by the Send to Computer blocks.

CX-Process Monitor uses a symbol for handling user-defined data called a "tag number" (a fixed name for each ITEM in each function block called a "tag ITEM") to specify the data to be monitored.

Note The following table shows the data that can be monitored or set on CX-Process Monitor.

Target data	Function blocks to be output to CX-Process Monitor (send to computer blocks)	Function blocks specifiable by send to computer blocks	Monitor	Setting	Tag No.	Tag ITEM
Each function block	1-Block Send Terminal to Computer (Block Model 403)	Basic PID, Advanced PID, Indication and Setting, Indication and Operation, Ratio Setting, Indicator	○	○	User-defined	—
	4-Block Send Terminal to Computer (Block Model 404) ∗1	Basic PID, Advanced PID, Indication and Setting, Indication and Operation, Ratio Setting, Indicator, High/Low Alarm, Timer, Counter				
Each ITEM (only ITEMs allocated a tag ITEM)	—	—	—			Fixed
Analog signal (including parameters)	AO to Computer (Block Model 402)	No restriction	○	×	User-defined	—
Contact signal (including parameters)	DO to Computer (Block Model 401)	No restriction	○	×	User-defined	—
Analog output	AO Terminal Settings from Computer (Block Model 410)		△ ∗2	○	User-defined	—
Contact output	DO Terminal Settings from Computer (Block Model 409)		△ ∗2	○	User-defined	—

∗1: This data cannot be registered to the Tuning screen by the 4-Block Send Terminal to Computer block (Block Model 404).

∗2: This data can be monitored by re-issuing the data to the network.

So, the following three operations must be performed to use CX-Process Monitor. Each of these operations is executed on CX-Process Tool.

1) Specify the source designation of function block or analog/contact signal by the Send to Computer blocks

(1) Specify the function block to be monitored or set by CX-Process Monitor by the 1-Block Send Terminal to Computer block (Block Model 403) or 4-Block Send Terminal to Computer block (Block Model 404) as the source designation.

(2) Specify the analog signals (including parameters) to be monitored by CX-Process Monitor by the AO to Computer (Block Model 402) as the source designation.

(3) Specify the contact signals (including parameters) to be monitored by CX-Process Monitor by the DO to Computer (Block Model 401) as the source designation.

(4) Register the AO Terminal Settings from Computer block (Block Model 410) or DO Terminal Settings from Computer block (Block Model 409) to be monitored or set by CX-Process Monitor. (The re-issue to network ITEM must be set to ON.)

Example

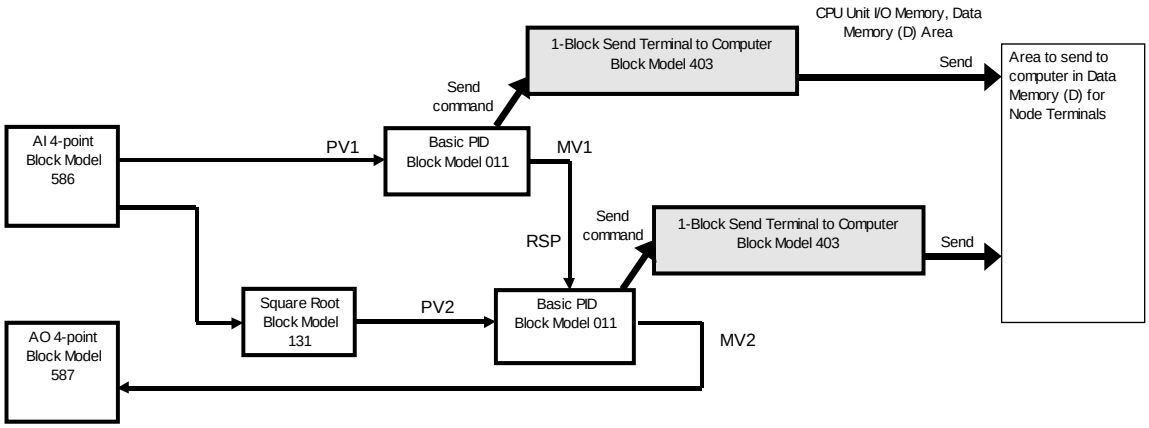

2) Set the tag number for function blocks or analog/contact signals (including parameters).

Example

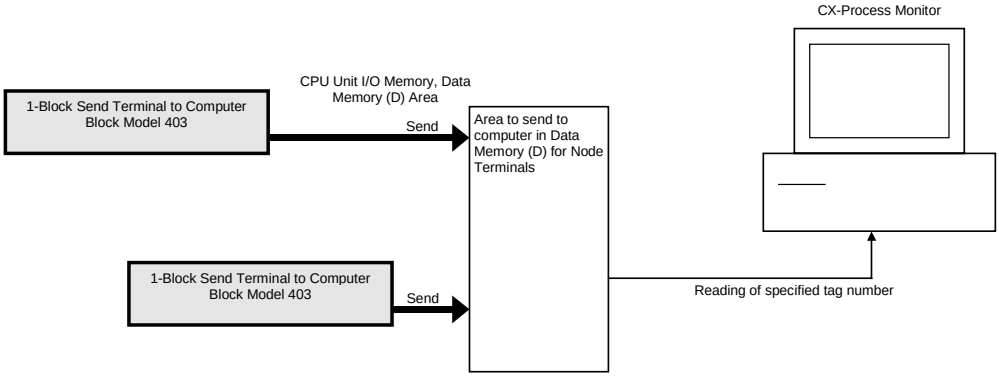

3) Compile a log data file by CX-Process Tool running on Windows NT.

Note Relationship between Screens in CX-Process Monitor and Function Blocks

The following table shows the relationship between the screens in CX-Process Monitor and function blocks.

Screen		Function blocks used (O: Use, —: Not used)					
		1-Block Send Terminal to Computer (Block Model 403)	4-Block Send Terminal to Computer (Block Model 404)	AO to Computer (Block Model 402), AO Terminal to All Nodes (Block Model 408)	DO to Computer (Block Model 401), DO Terminal to All Nodes (Block Model 407)	AO Terminal Settings from Computer (Block Model 410)	DO Terminal Settings from Computer (Block Model 409)
User customized	Overview screen	—	—	—	—	—	—
	Control screen	O (Basic PID, Advanced PID, Indication and Setting, Indication and Operation, Ratio Setting, Indicator)	O (Basic PID, Advanced PID, Indication and Setting, Indication and Operation, Ratio Setting, Indicator, High/Low Alarm, Timer, Counter)	O (Analog signal or analog value parameters)	O (contact signal or contact parameters)	O (analog output)	O (contact output, re-issue to network ON)
	Tuning screen	O (same as above)	—	—	—	—	—
	Trend screen	O (only above PV, SP and MV)	O (Basic PID, Advanced PID, Indication and Setting, Indication and Operation, Ratio Setting, and only PV, SP and MV of Indicator)	O (analog signal or analog value parameters)	O (contact signal or contact parameters)	O (analog output)	O (contact output, re-issue to network ON)
	Graphic screen	O (above tag ITEMs)	O (above tag ITEMs)	O (analog signal or analog value parameters)	O (contact signal or contact parameters)	O (analog output)	O (contact output, re-issue to network ON)
	Annunciator screen	O (only contacts in the above tag ITEMs)	O (only contacts in the above tag ITEMs)	—	O (contact signal or contact parameters)	—	O (contact output, re-issue to network ON)
	Operation Guide Message screen	—	—	—	O (contact signal or contact parameters)	—	O (contact output, re-issue to network ON)
	System Monitor screen	—	—	—	—	—	—
System fixed	Alarm Summary screen	O (only alarms in the above tag ITEMs)	O (only alarms in the above tag ITEMs)	—	—	—	—
	Operation Log screen	—	—	—	—	—	—
	System Monitor Log screen	—	—	—	—	—	—

3-4-2-1 How to exchange data between CX-Process Monitor and the CPU Unit

CX-Process Monitor supports two modes for reading data in the Area to send to computer on the CPU Unit:

1. On-demand read mode:

   CX-Process Monitor reads data in the Area to send to computer whenever it is required. The connection with CX-Process Monitor can be made by one of Host Link, Ethernet or Controller Link.

2. Data Link mode:

   CX-Process Monitor reads the Area to send to computer at all times by the Controller Link Data Link. In this mode, only Controller Link is supported as the connection protocol with CX-Process Monitor.

The following items describe the procedures required in each of these modes:

3-4-2-2 On-demand read mode

1) Allocate and specify the Data Memory for Node Terminals to the System Common block.
2) The Loop Control Unit sends the data or function block to be monitored to the Area to send to computer according to the Send to Computer block.
3) Allocate the tag numbers to the data or function block using CX-Process Tool so that CX-Process Monitor can identify the data.
4) CX-Process Monitor specifies the tag number from this area to read data via the Host Link.

3-4-2-3 Data Link mode

1) Allocate and specify the Data Memory for Node Terminals to the System Common block.
2) Set the Controller Link Data Link to user setting, and establish the Data Link between the computer on which CX-Process Monitor is running and the PC on which the Loop Control Unit is mounted.
3) The Loop Control Unit sends the data or function block to be monitored to the Area to send to computer according to the Send to Computer block.
4) Allocate the tag numbers to the data or function block using CX-Process Tool so that CX-Process Monitor can identify the data.

5) CX-Process Monitor specifies the tag number from this area to read data via the Data Link.

   For details on how to use the Node Terminals that use the Controller Link Data Link, see *Appendix 2 How to Use the Node Terminal Block*.

   For details on data exchange between CX-Process Monitor and the Loop Control Unit, see *CX-Process Monitor Operation Manual*.

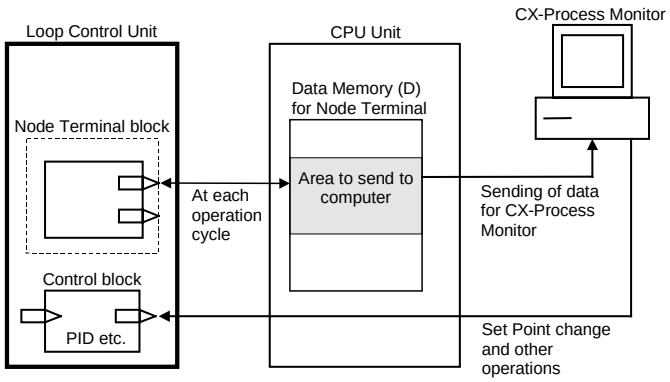

3-4-3 Exchanging Data with SCADA Software

To read Loop Control Unit function block data using SCADA software, the Send All Blocks function block (block model 462) is used to transfer specific ITEMs in Control Blocks, Operation Blocks, and External Controller Blocks to specified words in I/O memory in the CPU Unit. CSV tags (tags that can be created with the CX-Process Tool) are then used to specify ITEMs so that SCADA software be used read the ITEM data from the I/O memory of the CPU Unit.

To write Loop Control Unit function block data using SCADA software, CSV tags are then to specify ITEMs so that SCADA software can be used to write data to words to the I/O memory of the CPU Unit. The Receive All Blocks function block (model 461) is then used to transfer specific ITEMs in Control Blocks, Operation Blocks, and External Controller Blocks from the specified words in I/O memory to the Loop Control Unit.

For items that are not handled by the Send All Blocks function block and Receive All Blocks function block, an Expanded CPU Unit Terminal function block is used to read and write ITEM data in the same way, again using CSV tags.

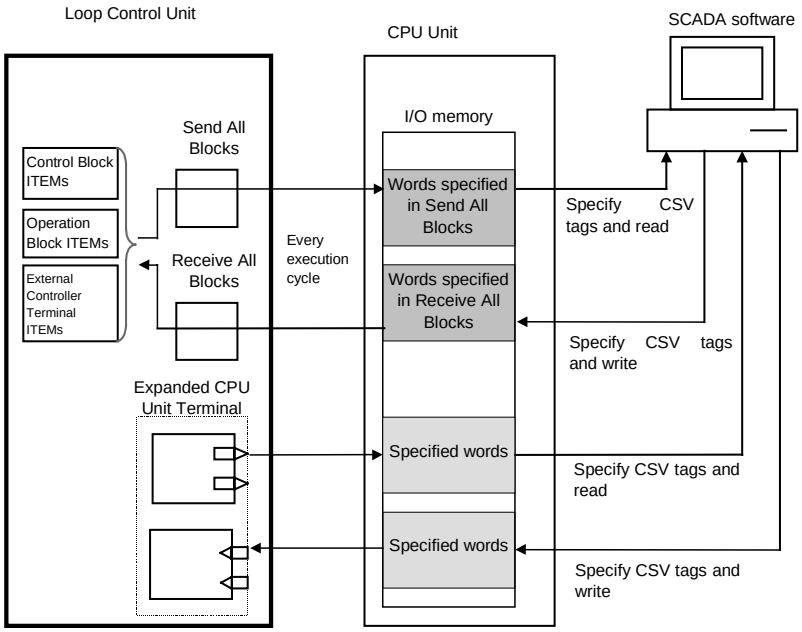

Note CSV tags are used by SCADA software. The CSV tags consist of tag numbers set for each function block, tag ITEMs corresponding to the function block ITEMs, and the I/O memory address for each ITEM in the CPU Unit. CSV tags are created using the CX-Process Tool. A CSV tag file can be imported to an OPC server, tag numbers and tag ITEMS can be specified from RS View or other SCADA software on the OPC server, and then the data can be written to the Loop Control Unit.

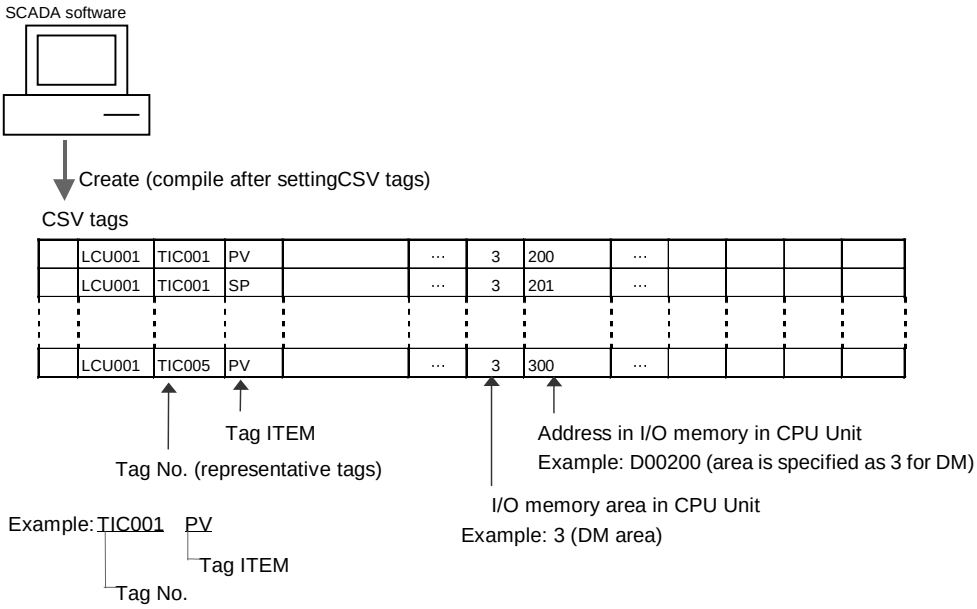

The contents of a CSV tag file is shown below.

Contents	Setting range
Record number	1 to 65535
Function block file name	Max. 6 characters
LCU name	Max. 6 characters
Tag No. (representative tag)	Max. 16 characters (Unusable characters: None)
Tag TEM	Fixed for each function block item
Tag comment	Max. 16 characters (Unusable characters: None)
Tag type	0: Analog, 1: Contact
Data attribute	Analog 0: Default, 1: Unit, 2: Integer Contact 0: OFF, 1: ON, 2: COS, 3: COSON
Contact alarm tag	0: Normal, 1: Alarm
Scaling upper limit	・5000 to 99999 (Example for DP position of 1: -550.0 to 9999.9)
Scaling lower limit	・5000 to 99999 (Example for DP position of 1: -550.0 to 9999.9)
Decimal point position (for scaling)	0 to 9
Unit	Max. 8 characters (Unusable characters: None)
Data range upper limit	・5000 to 99999
Data range lower limit	・5000 to 99999
Network address	0 to 127
Node address	1 to 32
Unit address	16 to 31
I/O memory area	0: CIO, 1: W, 2: H, 3: D, 4: E0
I/O memory address	0 to 65535
Bit position	0 to 15
Function block face plate (same as block model)	0 to 999
Block address	0 to 999
ITEM number	0 to 999
Offset (write data)	±32767 0: Same address for read and write, Not 0: Read address + offset
Read/write	R: Read, RW: Read/write, W: Write

3-4-4 Exchanging Data with a Loop Control Unit at Other Node

You can select the following two modes for exchanging data with a Loop Control Unit at another node via the Controller Link.

1) To use part of the regular Data Link (use the CPU Unit Terminal block or Expanded CPU Unit Terminal block)

Use this mode when exchanging data with a PC (CPU Unit) at another node or when exchanging data with a Loop Control Unit at the other node PC.

Note The maximum number of points must be within the “number of points used by the CPU Unit Terminal (maximum number of function blocks 16, 128 contacts per function block, analog value eight words) + number of points used by the Expanded CPU Unit Terminal block (maximum number of function blocks 30, 64 contacts per function block, analog value 64 words)”.

The regular Controller Link Data Link with the PC at the other node is established on the PC on which the Loop Control Unit is mounted. On this Data Link, the Loop Control Unit reads and writes the analog signals or contact signals to part of the Data Link on the CPU Unit by the CPU Unit Terminal block or Expanded CPU Unit Terminal block. Reading and writing in

this way enables data exchange between the Loop Control Unit and PCs (CPU Unit) on the other node or Loop Control Units mounted on that PC.

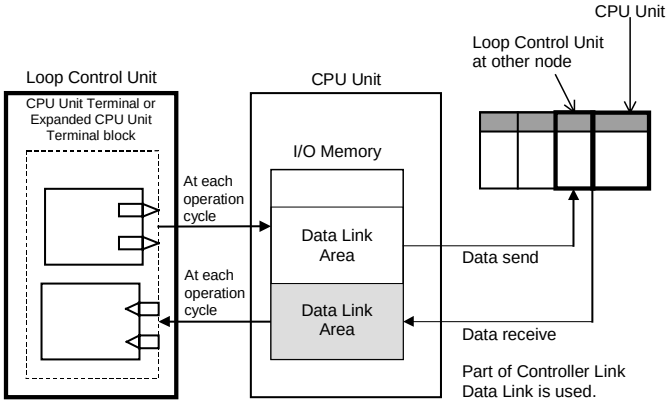

2) To occupy Data Link Area 1 or 2 (use the Node Terminal blocks)

This mode is used to perform data exchange with a Loop Control Unit on a PC at another node.

Note 1 The maximum number of points must be within the number used for the Send from All Nodes and Receive from All Nodes Node Terminal blocks (that is, maximum 50/100 function blocks, 32 contacts per function block, analog value two words).

The PC on which the Loop Control Unit is mounted occupies Data Link Area 1 or 2 for the Loop Control Unit to establish the Controller Link Data Link with the other node PC. Allocate the Data Memory (D) for the Node Terminals of the CPU Unit to the Data Link Area. This enables data exchange between the Loop Control Unit and Loop Control Unit at the other node PC by reading and writing the Data Memory (D) for the Node Terminals on the CPU Unit. Note, however, that Data Link Area 1 or 2 is occupied exclusively for the Loop Control Unit and cannot be used for other purposes.

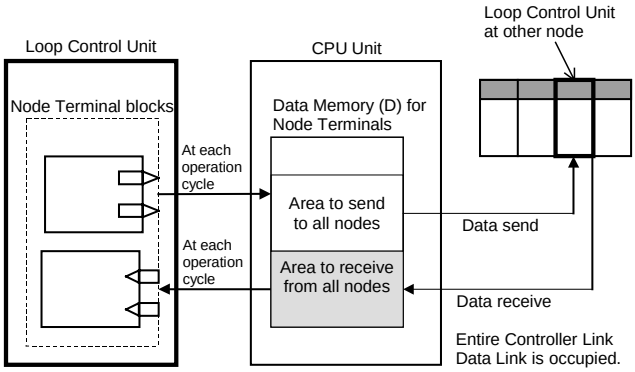

For details on how to use the Node Terminals that use the Controller Link Data Link, see *Appendix 2 How to Use the Node Terminal Block*.

Note 2 The allocation locations of each of the areas (Area to send to computer, Area to send to all nodes and Area to receive from all nodes) in Data Memory for the Node Terminals are as follows:

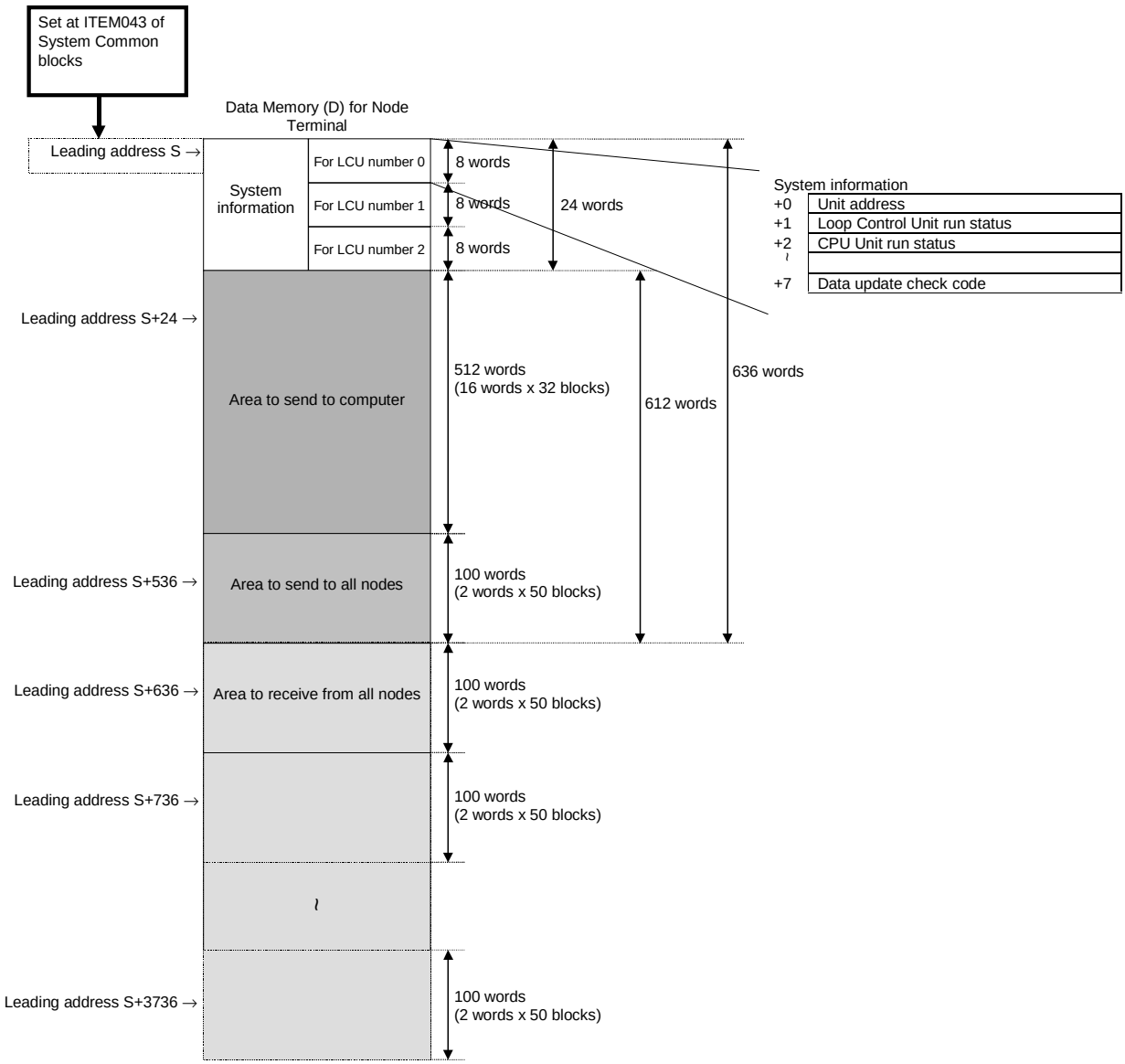

3-5 Fail-safe Countermeasure Guidelines

Implement fail-safe countermeasures on the Loop Control Unit according to the following guidelines.

3-5-1 Measures When the Loop Control Unit Has Stopped Running

When the Loop Control Unit stops running, the state before the stop occurred is held and all operations that were being executed on the Loop Control Unit are stopped. Refreshing between the CPU Unit and the function blocks on the Loop Control Unit is also stopped. For this reason, the values of the allocated areas on the Analog Output Unit and the Contact Output Unit whose refreshing cycle was changed are held at the state before the stop occurred by the AO and DO terminals of the Field Terminal block.

Implement the following fail-safe measures to hold analog outputs or contact outputs at specific values (for example, maximum value or minimum value) when the Loop Control Unit has stopped running.

3-5-1-1 Fail-safe countermeasures for adapting to stoppage of the Loop Control Unit when the CPU Unit is in the RUN or MONITOR mode

To hold analog outputs or contact outputs at specific values when the Loop Control Unit has stopped running, create a Step Ladder Program on the CPU Unit so that each of the allocated relays on the Analog Output Unit or Contact Output Unit are set to a specific value taking the b contact of the Loop Control Unit CPU Unit Running flag (bit 00 allocated relay n word) as the input conditions.

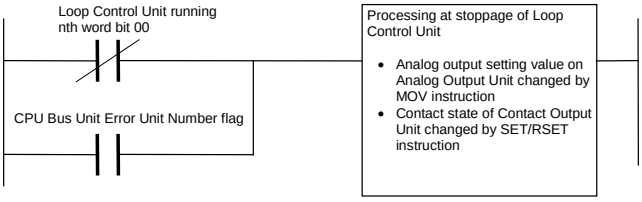

3-5-1-2 Fail-safe countermeasures for adapting to stoppage of the Loop Control Unit when the CPU Unit is in the PROGRAM mode

Analog output operation

When an Analog Output Unit (for example, CS1W-MAD44) is used in regular operation (that is, operation without a Loop Control Unit), the Analog Output Conversion Enable flag turns OFF and analog output values are output according to the setting of the output hold function when the CPU Unit changes from the RUN or MONITOR mode to the PROGRAM mode.

However, when analog values are output via the Analog Output Unit by the Loop Control Unit, the Analog Output Conversion Enable flag is forcibly turned ON by the Loop Control Unit even if the CPU Unit is in the PROGRAM mode, and the output hold function does not work.

The analog output setting values are refreshed and then output.

Contact output operation

Normally, the Contact Output Unit also turns OFF when the CPU Unit changes from the RUN or MONITOR mode to the PROGRAM mode. (The I/O Memory Hold flag is used to hold output values.)

However, when contact values are output via the Contact Output Unit by the Loop Control Unit, contact outputs are refreshed and then output if the CPU Unit is in the PROGRAM mode.

Implement the following fail-safe measures to hold analog outputs or contact outputs at specific values (for example, maximum value or minimum value) when the Loop Control Unit has stopped running even if the CPU Unit is in the PROGRAM mode.

1) When the user uses CX-Process Monitor or CX-Process Tool to stop running of the Loop Control Unit when the CPU Unit is in the PROGRAM mode:

   Before the Loop Control Unit is made to stop running, switch Control blocks such as PID blocks to Manual, and use CX-Process Monitor or CX-Process Tool to execute setting so that the MV becomes the required value.

2) To set ITEM014 (run/stop command) of the System Common block to 0 (stop) by the ITEM Setting blocks on the Loop Control Unit:

   Before writing to the ITEM Setting blocks, switch Control blocks such as PID blocks to Manual, and create a sequence so that the MV becomes the required value beforehand using the Step Ladder Program block.

Note 1 When the Loop Control Unit stops running due to a malfunction of the Loop Control Unit itself when the CPU Unit is in the PROGRAM mode, analog output or contact output cannot be held at specific values (for example, maximum value or minimum value). This must be taken into consideration when designing the system.

Note 2 Processing that causes the Loop Control Unit to stop running can also be executed when the CPU Unit is in the PROGRAM mode.

In this case, enter ITEM013 (PROGRAM mode) of the System Common block (Block Model 000) as the CPU Unit run status, and set ITEM014 (run/stop command) of the System Common block to 0 (stop) by the Step Ladder Program block (Block Model 301) and the ITEM Setting blocks (Block Models 171 and 172).

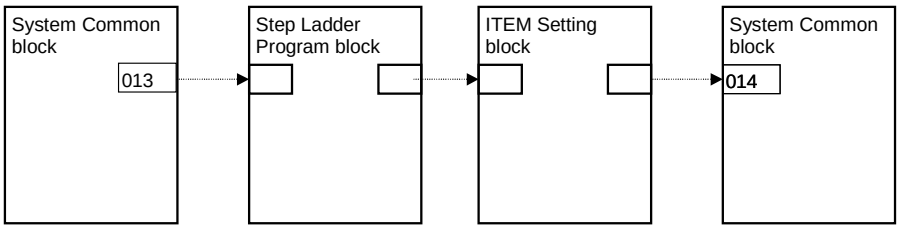

3-5-2 Measures for a CPU Unit fatal error

When a fatal error occurs on the CPU Unit (including during execution of the FALS command), the Loop Control Unit also stops running. To hold the analog output to the previous value before the stop occurred, and to set the analog output to either the minimum value or maximum value, use the output hold function of the Analog Output Unit or Analog Input/Output Unit.

Note The Loop Control Unit continues to run even if the Output OFF flag causes output refreshing of the CPU Unit to stop. Note, however, that in this case contacts are not output and turn OFF, and the output hold function of the Analog Output Unit holds analog output to a specific value. For this reason, the Loop Control Unit only performs internal operations, and does not perform control on the outside.

3-5-3 Required Conditions for the Man-Machine Interface

The Loop Control Interface itself does not have a man-machine interface. So, an external interface such as CX-Process Monitor that satisfies the following conditions must be provided:

- Loop Control Unit run/stop command function and run status display function (operation of ITEM014 to ITEM017 of the System Common block)
- Loop Control Unit error status display function (operation of ITEM091 to ITEM095 of System Common block)
- Basic display function for Set Point, PV, MV and other values
- Basic setting function for Set Point and other settings
- Function for changing P, I, D and other parameters
- Auto/Manual switching and manual operation functions

SECTION 4
Simple Example of Use

4-1 SIMPLE EXAMPLE OF USE 140

4-1 Simple Example of Use

This section describes the basic procedure for using the Loop Control Unit for cascade control.

Step 1 Design

1, 2, 3… 1. Prepare an instrumentation drawing.

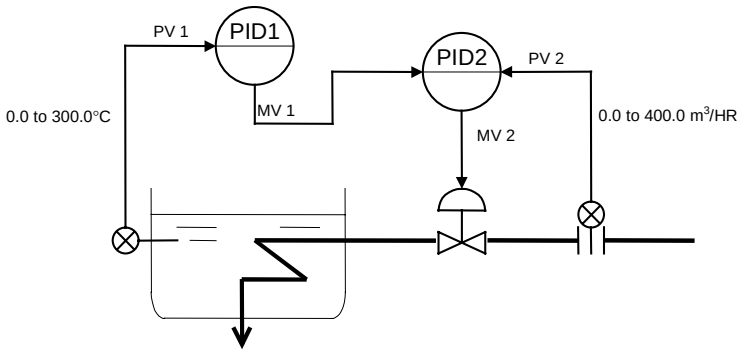

2. Decide on the PC system configuration.

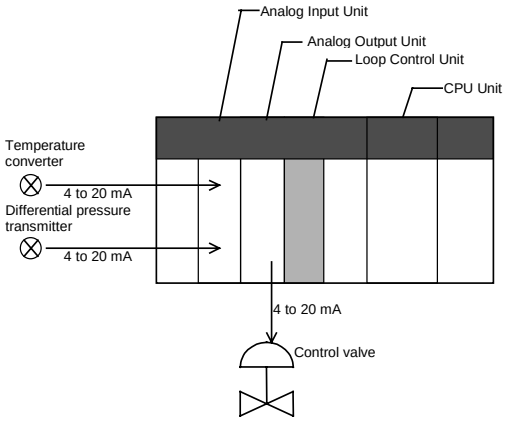

Product name	Model	Description
CPU Unit	CS1H/G-CPU□□	
Loop Control Unit	CS1W-LC001	
Analog Input Unit	CS1W-AD041	• Analog input 1: 4 to 20 mA (temperature conversion input) • Analog input 2: 4 to 20 mA (differential pressure transmitter input)
Analog Output Unit	CS1W-DA041	• Analog output 1: 4 to 20 mA (output to control valve)

3. Select the required function blocks.

Software type	Function block name
Field terminal	AI 4-point (Block Model 586)
	AO 4-point Terminal (Block Model 587)
Wiring diagram	Square Root (Block Model 131)
	Basic PID (Block Model 011)
	Basic PID (Block Model 011)

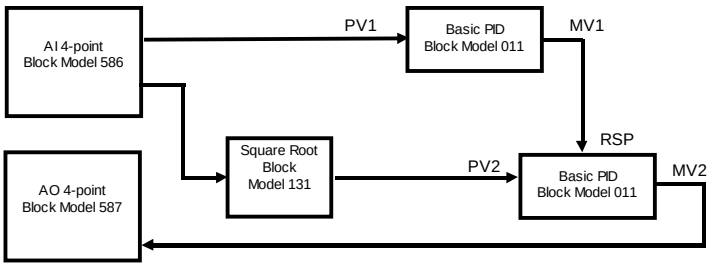

4. Decide on the function block system configuration.

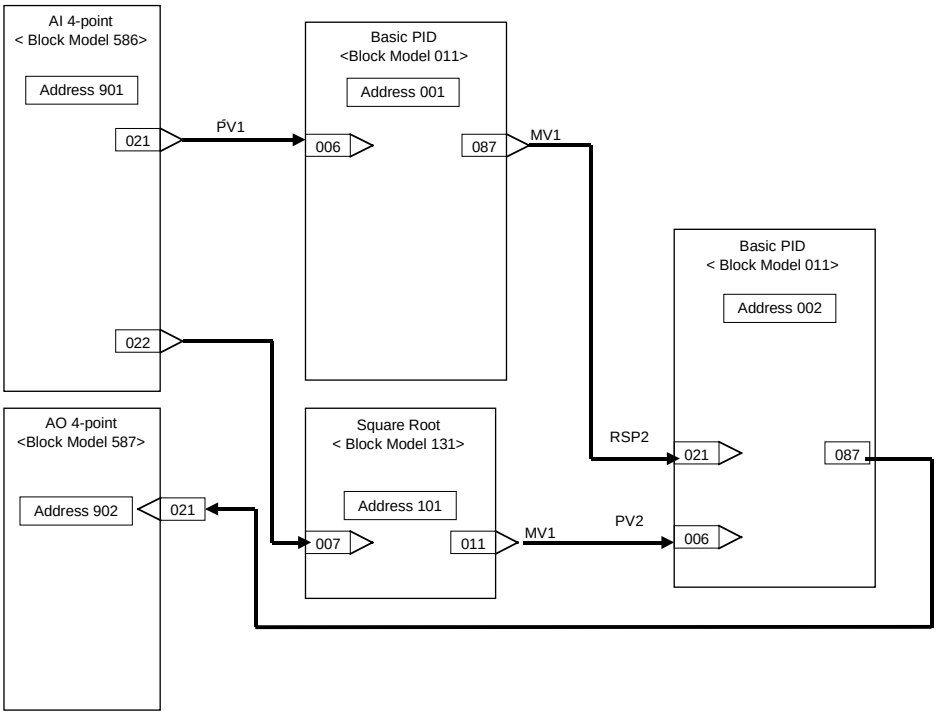

5. Decide on the data to be monitored and manipulated by CX-Process Monitor.

   In this example, the data of two Basic PID blocks is monitored and manipulated on CX-Process Monitor.

   So, specify each of the Basic PID blocks as the source designation Control block addresses in the 1-Block Send Terminal to Computer block (Block Model 403).

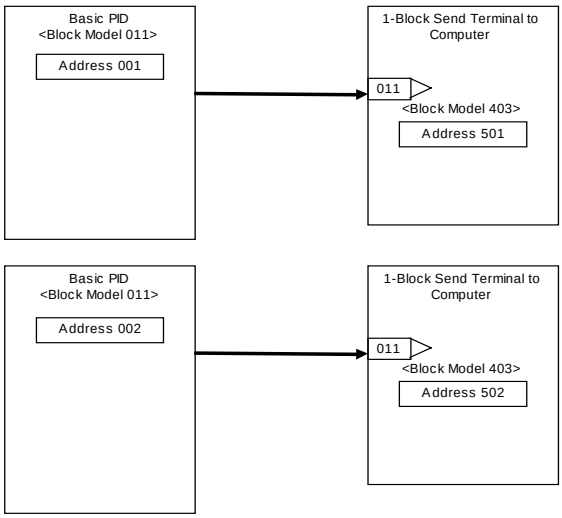

The following table shows the function blocks to be monitored.

Block address	Function block name	Tag No.	Tag comment	High limit (RH)	Low limit (RL)	Unit (UNIT)	Decimal point (DP)
001	Basic PID	PID1		0	300	°C	1
002	Basic PID	PID2		0	400	m^3/HR	1

Step 2 Preparing Function Block Data on CX-Process Tool

1, 2, 3… 1. Set up and start CX-Process Tool.

2. Set the System Common block data.

   Set the specifications common to each function block in the System Common block (Block Model 000). The ITEMs in this block must be set as the initial settings when the Loop Control Unit is to be used.

   In this example, set as follows:

   - Set the operation cycle in the System Common block to 0.5 sec.
   - Set the START mode at power ON to Hot start (1).
   - Set the LCU number of the Loop Control Unit to be used to 0.
   - Set the leading address of the Data Memory for the Node Terminals to D16020.

ITEM	Data description	Data range	Setting example
004	Operation cycle (sec.) 1: 0.1, 2: 0.2, 3: 0.5, 4: 1, 5: 2	1 to 5	3
018	Start mode at power ON 1: Hot start, 2: Cold start	1 to 2	1
042	LCU number of LC001 0: Basic, 1: Expansion 1, 2: Expansion 2	0 to 2	0
043	Leading address of Data Memory (D) for the Node Terminals (Same address is necessary for roles 0 to 2.)	0 to 32767 (in word units)	16020

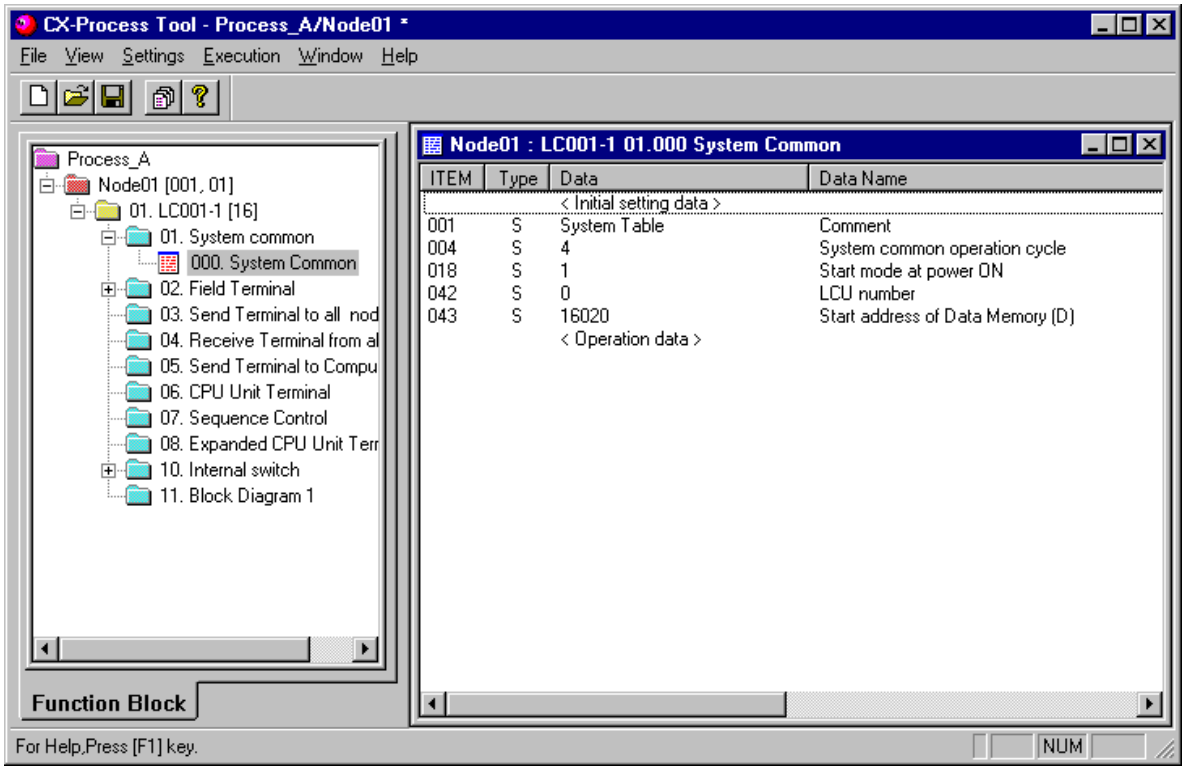

3. In CX-Process Tool, select the function blocks to be used (including allocations to block addresses).

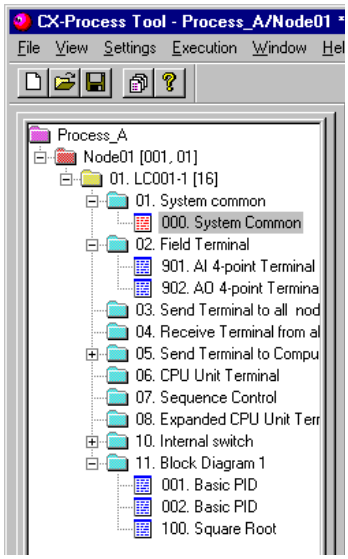

4. Wire in the software the analog signals between blocks.

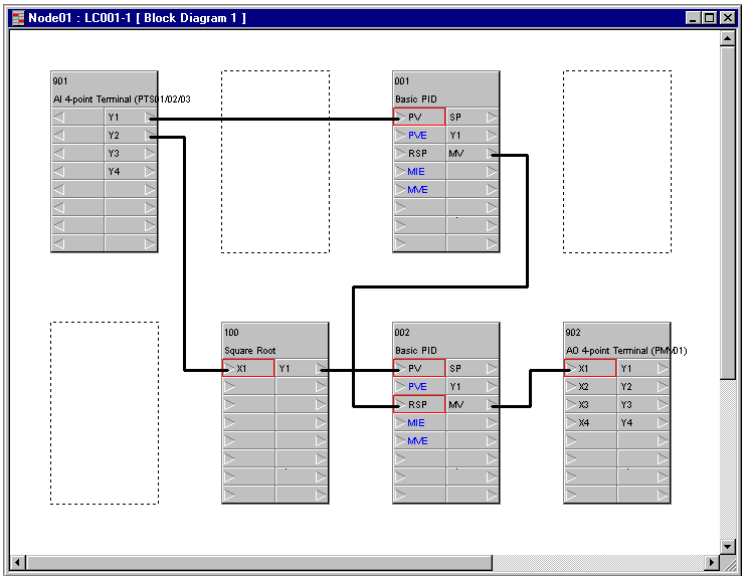

5. Set the ITEMs in each function block.

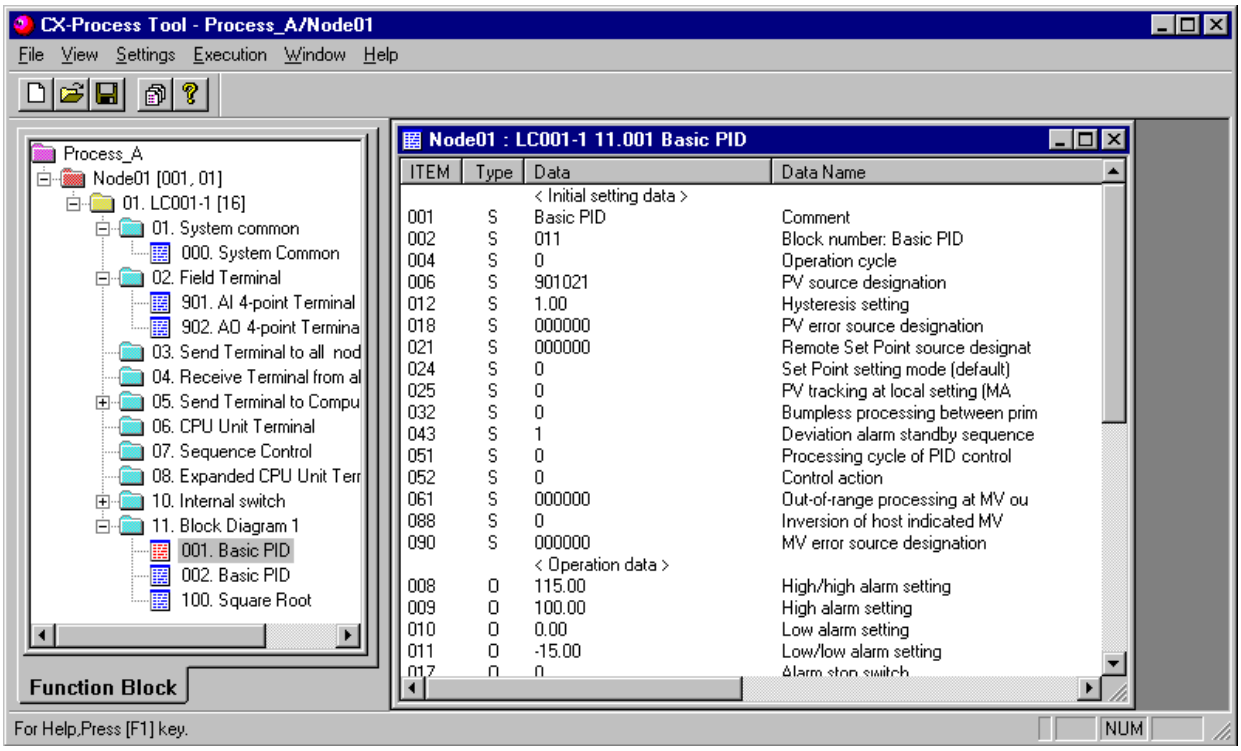

Set function block initial setting parameters (refer to the item "(S): Initial setting data" describing how to read/write in the *Function Block Reference Manual*) such as direct/reverse action and Set Point setting mode (Remote/Local) on CX-Process Tool.

Operation-related parameters (refer to the item "(O): Operation Data" describing how to read/write in the *Function Block Reference Manual*) such as PID constants may be set either on CX-Process Tool or CX-Process Monitor.

When using the CX-Process Monitor

6. Set the Terminals to Computer for CX-Process Monitor.

   On CX-Process Tool, specify the two Basic PID blocks that are to be monitored by CX-Process Monitor as the source designation of the 1-Block Send Terminal to Computer block (Block Model 403)*1.

   *1: The PID blocks cannot be registered to the Tuning screen by 4-Block Send Terminal to Computer block (Block Model 404).

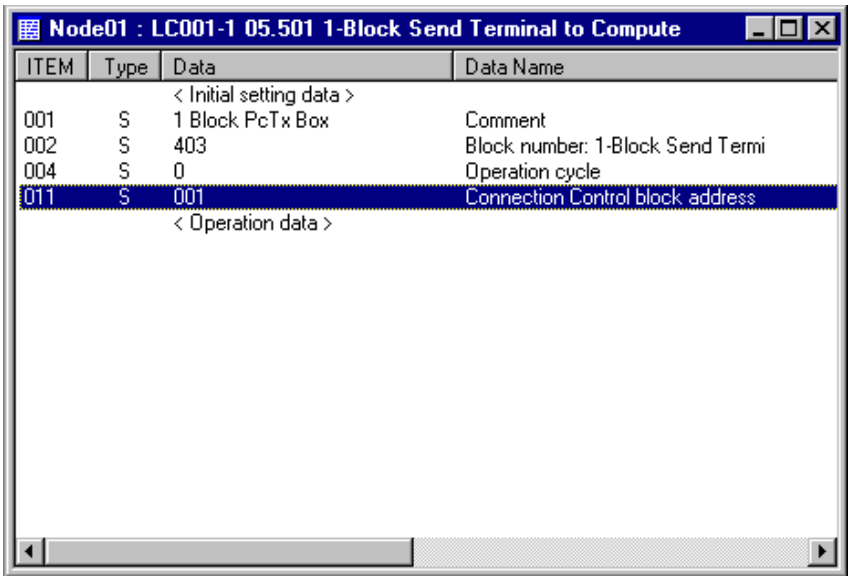

Note Only the Control blocks and some of the Operation blocks (in case of 4-Block Send Terminal blocks) can be sent as the function blocks to CX-Process Monitor by the 1-Block Send Terminal to Computer block or 4-Block Send Terminal to Computer block. The ITEMs in each of these function blocks are also predetermined as defaults. (A fixed name called a "tag ITEM" is allocated to each ITEM.) To send ITEMs other than these (such as contacts or analog value parameters) to CX-Process Monitor, specify that ITEM as the source designation by the DO to Computer block or the AO to Computer block.

7. Set the monitor tags.

   Set the tag number, tag comment, scaling, unit and decimal point position on CX-Process Tool.

   By setting the tag number set here on CX-Process Monitor, you can monitor function blocks sent by the Send to Computer blocks, analog signals (including parameters) and contact signals (including parameters).

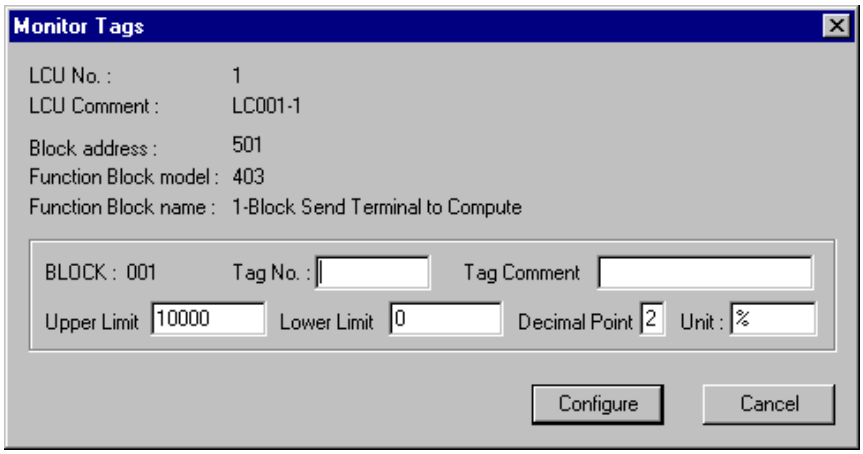

8. Create (compile) the monitor tag file.

When using SCADA software

6. Register a Send All Blocks, Receive All Blocks, or Expanded CPU Unit Terminal function block.
7. Set the CSV tags.
8. Create (compile) the CSV tag file

Step 3 Setting up the Loop Control Unit

1, 2, 3… 1. Mount the Loop Control Unit, and wire the Analog Input Unit and Analog Output Unit.

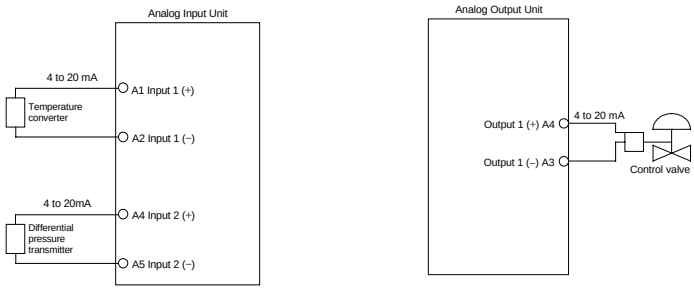

The Loop Control Unit itself need not be wired.

2. Set the unit number on the front panel of the Loop Control Unit.
3. Connect the Programming Devices.
4. Turn power ON to the PC.
5. Prepare I/O tables using the Programming Devices.

Note The following restrictions are applied when the CX-Programmer (Ver1.1) is used to prepare I/O tables:

- If the registered I/O table is read to the I/O Table window (by downloading from the PC to the Computer) after mounting the Loop Control Unit and preparing I/O tables online, "unit type unknown" will be indicated on the Loop Control Unit. This, however, causes no problem in operation.

- This Loop Control Unit cannot be set to I/O tables by editing the I/O table offline.

6. Set the communications conditions of the serial communications port in the PC system settings using the Programming Devices if necessary.
7. Set the allocated Data Memory area of the Analog Input Unit or Analog Output Unit using the Programming Devices.

Step 4 Downloading the Function Block Data to the Loop Control Unit

1, 2, 3…

1. Turn power OFF to the PC.
2. Set the DIP switches on the front panel of the CPU Unit (SW4: ON when using the peripheral port, OFF when using the RS-232C port).
3. Connect the CPU Unit to the Computer on which CX-Process Tool is running.

- Connection to peripheral port (only Host Link connection is supported)

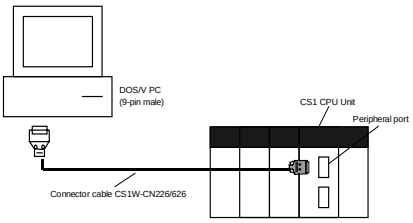

- Connection to RS-232C port (only Host Link connection is supported)

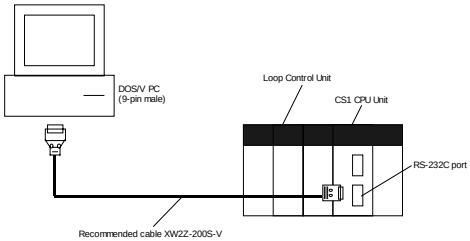

4. Turn power ON to the PC.
5. Set the network address (000), node address (01) and unit address (unit number + 10 Hex in decimal) on CX-Process Tool. ([Settings]-[Network Settings])
6. Establish the Host Link connection on CX-Process Tool. ([File]-[Initialize Serial Port/F])
7. Download the function block data prepared on CX-Process Tool to the Loop Control Unit. ([Execution]-[Download])
8. Execute the run/stop command on CX-Process Tool ([Execute]-[Run]-[Run/Stop Command]) or turn the PC OFF then back ON again.

Note Check the following points before you start Loop Control Unit operation.

1) The correct combination of Analog Input/Output Units must be mounted.
2) The unit address set on the front panel of Analog Input/Output Units must match the unit number set on the Field Terminals. Otherwise, data input/output (read/write) operations will be performed by mistake on the data of another Special I/O Unit (having the unit number set on the Field Terminals).
3) The correct defaults of the System Common block on the Loop Control Unit must be set. In particular, make sure that the same applications as those for other PCs are not set for the Data Memory (DM) for the Node Terminals on the CPU Unit to be used by the Loop Control Unit.

9. Check the LEDs on the front panel of the Loop Control Unit (RUN LED lit, ERC LED out).

Step 5 Trial Operation

1, 2, 3…

1. Execute the run/stop command on CX-Process Tool ([Execute]-[Run]-[Run/Stop Command]) or turn the PC OFF then back ON again.

2. Check system operation on CX-Process Tool. ([Execute]-[Run]-[Monitor run status])

   Execute the load rate check and other diagnostic checks.

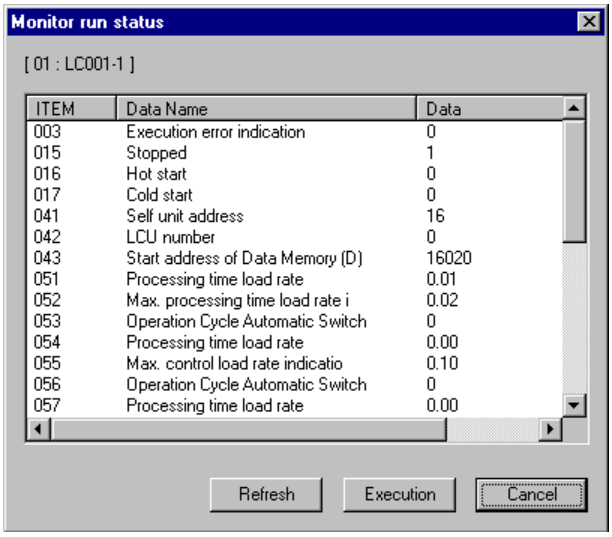

ITEM	Data Name	Data
003	Execution error indication	0
015	Stopped	1
016	Hot start	0
017	Cold start	0
041	Self unit address	16
042	LCU number	0
043	Start address of Data Memory (D)	16020
051	Processing time load rate	0.01
052	Max. processing time load rate i	0.02
053	Operation Cycle Automatic Switch	0
054	Processing time load rate	0.00
055	Max. control load rate indicatio	0.10
056	Operation Cycle Automatic Switch	0
057	Processing time load rate	0.00

3. Check the wiring on CX-Process Tool. ([Validate Action]-[Start])

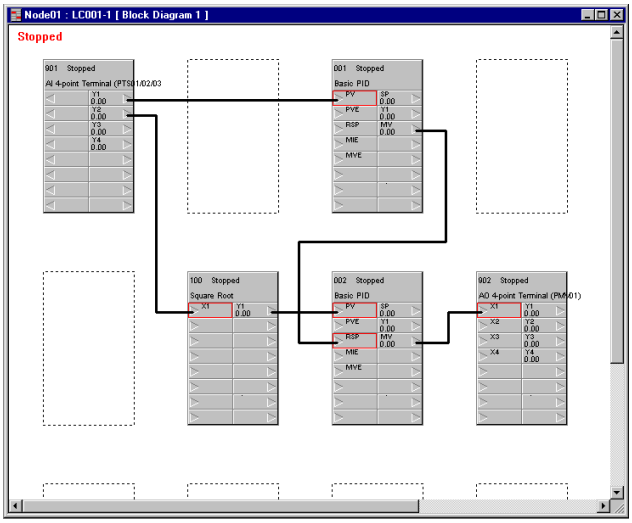

4. Set up and start CX-Process Monitor.
5. Set the Set Point and other settings on CX-Process Monitor.

Step 6 Actual Operation

1. Tune the Loop Control Unit on CX-Process Monitor. (For example, change the settings and PID constants.)
2. Monitor PV and alarms on CX-Process Monitor.

SECTION 5
Examples of Function Block Combinations

5-1 BASIC EXAMPLES OF PID CONTROL 152

5-1-1 Simple PID Control 152
5-1-2 Multi-channel PID Control 153
5-1-3 PID Control for Switching Multiple Set Points 154
5-1-4 PID Control for Switching PID Constants by Three Set Point Zones 155
5-1-5 Ramp Program Control 158
5-1-6 Time-proportional Control 159
5-1-7 Monitoring and Accumulating Flowrate 160

5-2 EXAMPLES OF APPLIED CONTROL TYPES 161

5-2-1 Cascade Control 162
5-2-2 Feedforward Control 165
5-2-3 Sample PI Control 168
5-2-4 Dead Time Compensation 170

5-1 Basic Examples of PID Control

This section shows basic examples of how to connect the function blocks when performing PID control.

5-1-1 Simple PID Control

Function block used: Basic PID (Block Model 011)

Use the Field I/O Terminal blocks (AI 4-point/AO 4-point Terminal blocks, etc.) as the analog input/outputs.

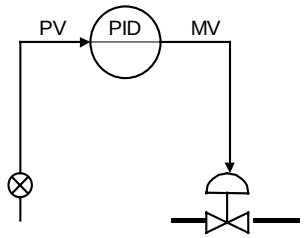

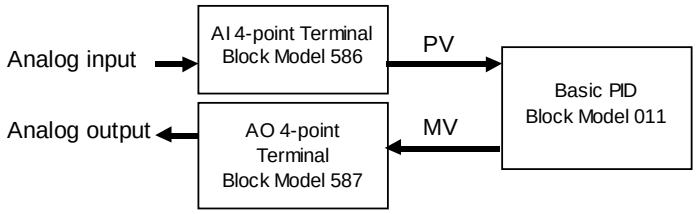

Note When the square root function is used in flowrate control, insert the Square Root block (Block Model 131) in analog input.

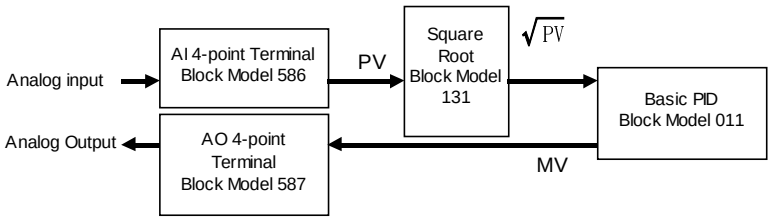

5-1-2 Multi-channel PID Control

Function blocks used: Basic PID (Block Model 011)
Constant ITEM Setting (Block Model 171)
Step Ladder Program (Block Model 301)

Use the Field I/O Terminal blocks (AI 8-point/AO 8-point Terminal blocks, etc.) as the analog input/outputs.

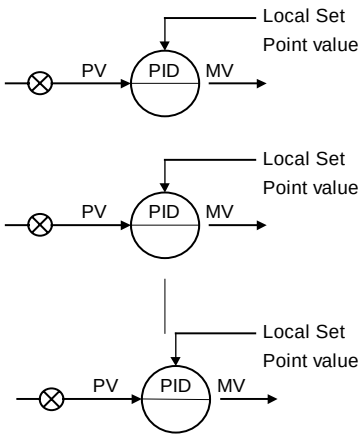

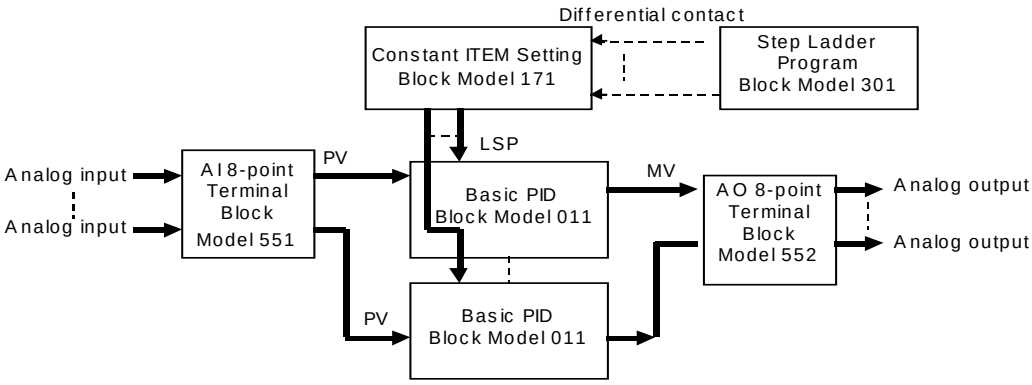

5-1-3 PID Control for Switching Multiple Set Points

Function blocks used: Basic PID (Block Model 011)
Contact Selector (Block Model 165)
DI Terminal from CPU Unit (Block Model 451)

Register multiple Set Points for switching in advance to the Constant Selector block. Connect the DI Terminal from CPU Unit block to the Constant Selector block, and switch the Local Set Points of the Basic PID block according to the I/O memory (contacts) of the CPU Unit.

Use the Field I/O Terminal blocks (AI 4-point/AO 4-point Terminal blocks, etc.) as the analog input/outputs.

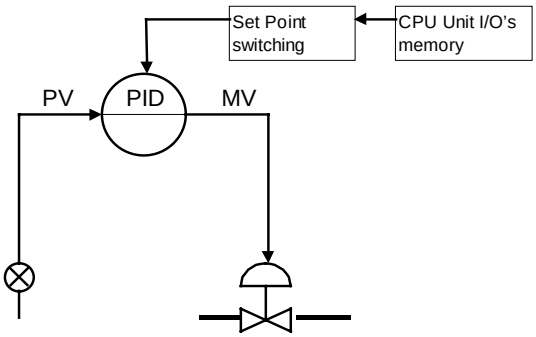

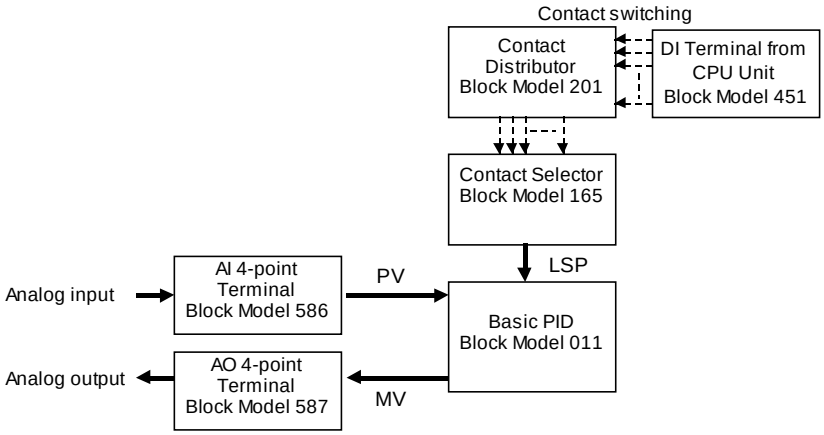

5-1-4 PID Control for Switching PID Constants by Three Set Point Zones

Function blocks used: Basic PID (Block Model 011)
ITEM Setting (Block Model 171)
High/Low Alarm (Block Model 111)
Step Ladder Program (Block Model 301)

Register three sets of PID constants for switching in advance to the three Constant ITEM Setting blocks. Input the current Set Point value of the Basic PID block to the High/Low Alarm block. Three Set Point zones can be prepared in the Step Ladder Program block by combining the high alarms and low alarms of the High/Low Alarm block. Select the Constant ITEM Setting block according to the Set Point zone.

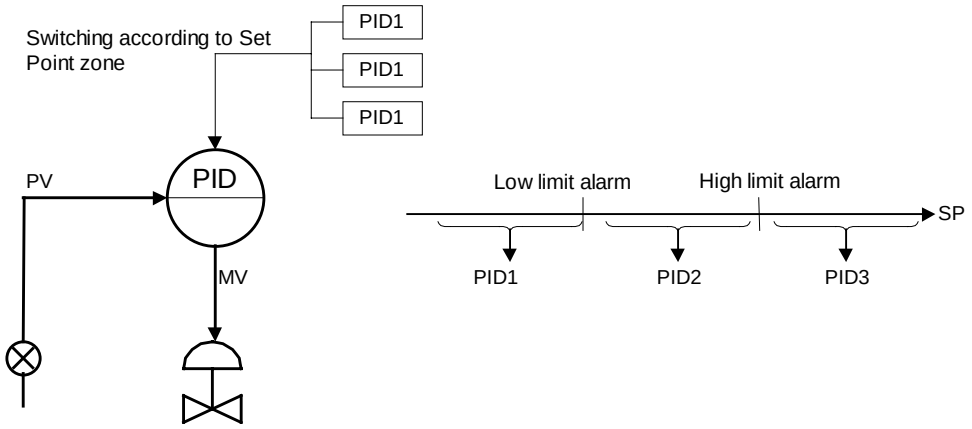

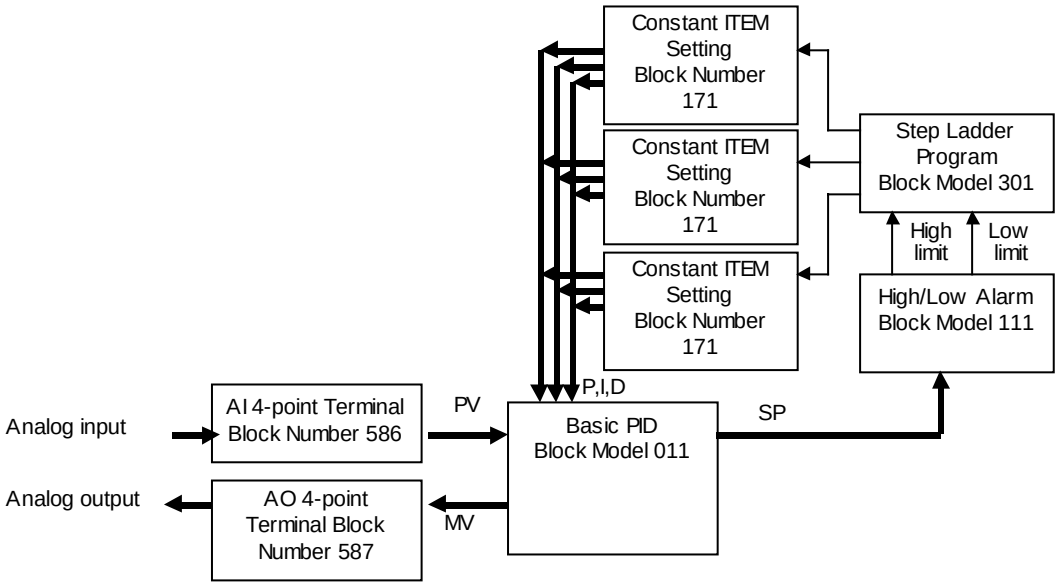

Block address	ITEM No.	Data	Explanation
901	002	586	AI 4-point Terminal block
	021		Y1 (analog input 1)
902	002	587	AO 4-point terminal block
	021	001087	X1 (analog output 1) source designation
	031		X1 (analog output 1)
001	002	011	Basic PID Block
	006	901021	PV source designation
	029		Current SP
	054		P (proportional band)
	055		I (integral time)
	056		D (derivative time)
	087		MV
100	002	111	High/low limit alarm block
	007	001029	X1 input value source designation
	012		U1 high limit alarm
	013		U2 low limit alarm
400	002	301	Step Ladder Program block
		2100	STEP00 declaration
		01100013	When ITEM013 low alarm of LOAD address 100
		11101039	Set constant ITEM of OUT address 101. (batch send command)
		02100012	When not ITEM012 (high alarm) of LOAD NOT address 100
		04100013	When not ITEM013 (low alarm) of AND NOT address 100
		11102039	Set constant ITEM of OUT address 102. (batch send command)
		01100012	When ITEM012 high alarm of LOAD address 100
		11103039	Set constant ITEM of OUT address 103. (batch send command)
101	002	171	Constant ITEM Setting block
	021		Setting of P (proportional band) 1 value
	022		Setting of I (integral time) 1 value
	023		Setting of D (derivative time) 1 value
	011	001054	Destination designation of ITEM021
	012	001055	Destination designation of ITEM022
	013	001056	Destination designation of ITEM023
	039		Batch send switch
102	002	171	Constant ITEM Setting block
	021		Setting of P (proportional band) 2 value
	022		Setting of I (integral time) 2 value
	023		Setting of D (derivative time) 2 value
	011	001054	Destination designation of ITEM021
	012	001055	Destination designation of ITEM022
	013	001056	Destination designation of ITEM023
	039		Batch send switch
103	002	171	Constant ITEM setting block
	021		Setting of P (proportional band) 3 value
	022		Setting of I (integral time) 3 value
	023		Setting of D (derivative time) 3 value
	011	001054	Destination designation of ITEM021
	012	001055	Destination designation of ITEM022
	013	001056	Destination designation of ITEM023
	039		Batch send switch

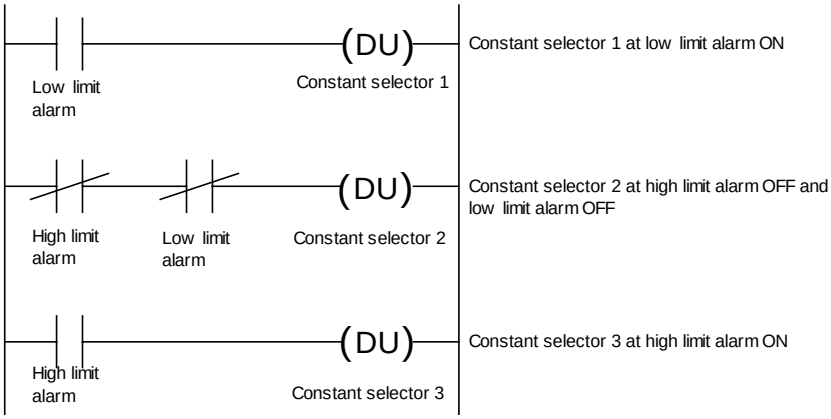
(DU)
Constant selector 1 at low limit alarm ON
Low limit alarm
Constant selector 1
(DU)
Constant selector 2 at high limit alarm OFF and low limit alarm OFF
High limit alarm
Low limit alarm
Constant selector 2
(DU)
Constant selector 3 at high limit alarm ON
High limit alarm
Constant selector 3

5-1-5 Ramp Program Control

Follow the procedure below to perform program control for changing the Set Point value in a ramp manner proportionately to the elapsed time.

Function blocks used: Basic PID (Block Model 011)
Ramp Program (Block Model 155)
Step Ladder Program (Block Model 301)

Register the ramp program (max. seven steps, each step comprising a ramp rate and soak value) in advance to the Step Ladder Program block. The Step Ladder Program is used in combination with the run/stop command from the Step Ladder Program block and the arrival at final signal to the Step Ladder Program block.

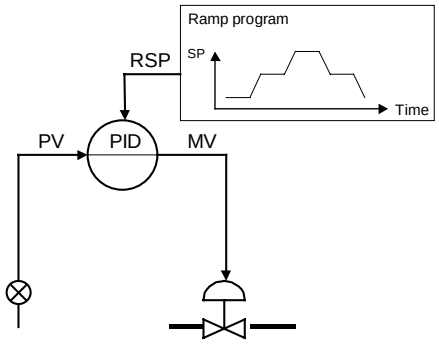

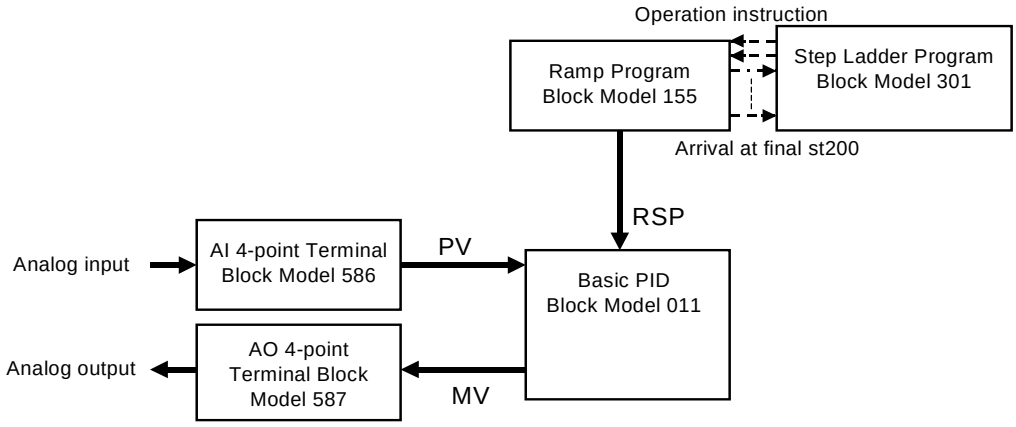

5-1-6 Time-proportional Control

Follow the procedure below to perform time-proportional control where contact output (ON/OFF) changes proportionately to the ON/OFF time ratio.

Function blocks used: Basic PID (Block Model 011)
Analog/Pulse Width Converter (Block Model 192)

Assign the MV of the PID function block to the Analog/Pulse Width Converter block. The Analog/Pulse Width Converter block outputs the ON/OFF pulse signal obtained by changing the ON and OFF times proportionally to MV.

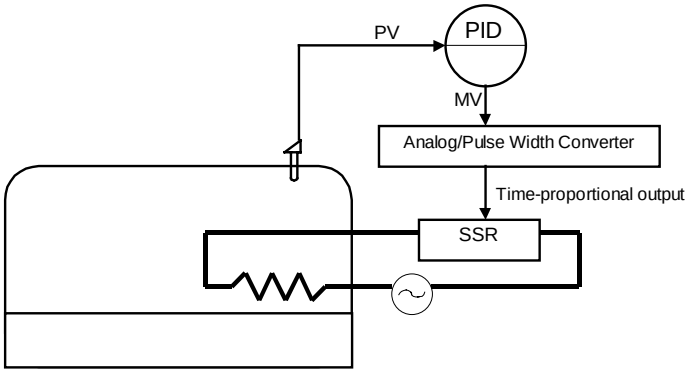

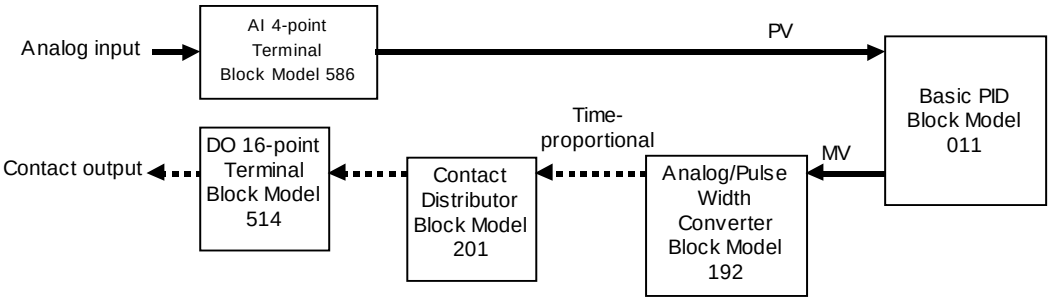

5-1-7 Monitoring and Accumulating Flowrate

Function blocks used: PI 4-point Terminal (Block Model 562)
Accumulator for instantaneous value input (Block Model 150)

Connect the instantaneous value output value of the PI 4-point Terminal block to the Accumulator for instantaneous value input block when accumulating 8-digit accumulated values based on the instantaneous values from the Pulse Input Unit CS1W-PPS01.

Example Let's apply scaling of 0 to 6000 to zero (0%) through to span (100%) of the pulsse input instantaneous value, and set accumulation to maximum 1200.00 per hour. (The accumulated value is taken to be 1200.00 when 6000 has continued for 100% for one hour.) The accumulation result is stored to ITEM012 and ITEM013 of the Accumulator for instantaneous value input block.

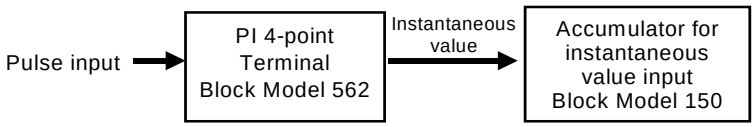

Block address	ITEM No.	Data	Explanation
901	002	562	PI 4-point terminal block
	010	3	Instantaneous value output range 3: 0 to 6000
	021	0 to 115.00%	Y1 (instantaneous value output value 1) Note 1
100	002	150	Accumulator for instantaneous value input
	007	901021	X1 source designation
	008		Input
	009	1200.00	QR accumulation rate (accumulation value when input 100% is continuous for one hour)
	010	2	TU time unit (2: time)
	012	0000 to 9999	Accumulated value (lower 4 digits)
	013	0000 to 9999	Accumulated value (upper 4 digits)

Note 1 This instantaneous value differs from the instantaneous value, that is reflected in the allocated relay words n+1 to n+4 of the Pulse Input Unit CS1W-PPS01, in that the instantaneous value is for each operation cycle of the PI 4-point Terminal block.

5-2 Examples of Applied Control Types

This section shows examples of applied control types when controlling special control targets.

As the function blocks of the Loop Control Unit can be combined as desired (excluding restrictions on the number of function blocks according to function block address), use this feature to build a control system suited to your particular control requirements.

The following table shows the relationship between example control types corresponding to special control targets and the purpose of the control.

Control purpose	Control type example	Page
Suppression of disturbance (on secondary loop)	Cascade control	162
Adaptation to dead time from secondary through to primary loop		
Suppression of disturbance (on primary loop)	Feedforward control	165
Suppression of disturbance (on primary and secondary loops)	Cascade + feedforward control	162/165
Adaptation to mutual interaction between processes	Non-interacting control (a type of feedforward control)	167
Adaptation to dead time	Sample PI control	168
	Dead time compensation	170
Adaptation to changes in dead time	Variable sample cycle control	169

Note "Special control targets" here refer to the following.

- Processes having a prolonged dead time
- Processes who dynamic or static characteristics change
- Processes whose dynamic characteristics are not the "regular dead time + first-order lag"
- Processes whose non-linearity of dynamic or static characteristics is large
- Processing involving a large number of variables and strong mutual interaction

However, design your system taking into consideration the possibility that the control target cannot be completely controlled by this Loop Control Unit (take into consideration that functions for observing the characteristics of the control target are required).

5-2-1 Cascade Control

In the following instances, input the MV of PID1 on the primary loop and the Remote Set Point of PID2 on the secondary loop, and connect the PC in series. This configuration is referred to as "cascade control."

1) When there are two controllable processes, and the process to be controlled is one of the processes (PV of primary loop)
2) When the other (primary loop) can be controlled by controlling the other of the two (secondary loop)
3) When there is disturbance on the other process (secondary loop), or when there is dead time until the effect of change on the other (secondary loop) operated terminal appears in the PV of the other (primary loop)

PID1 of the primary loop indirectly controls the finite control element of the secondary loop by controlling the setting value of PID2.

By this control, PID2 of the secondary loop absorbs the disturbance on the secondary loop, and suppresses the influence of the disturbance on the secondary loop on the primary loop. (The effect on the disturbance on the secondary loop increases as the response of the secondary loop process becomes faster than primary loop processes.)

Note 1 This kind of cascade control has no effect on disturbance entering the primary loop. Cascade control must be combined with feedforward control in this case.

Function blocks used: Two Advanced PID blocks (Block Model 012)

Example

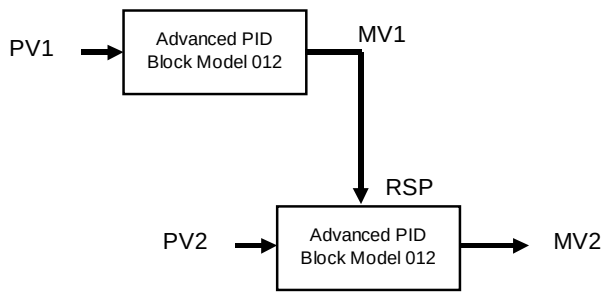

MV output of one Advanced PID block is input to the Remote Set Point of the other Advanced PID block.

Note 2 In cascade control, when the secondary loop PID2 is set to Local, MV1 of the primary loop PID1 must be tracked to changes on the Local Set Point setting (LSP2) (matched to LSP2).

This Loop Control Unit is provided with a bumpless MV tracking function on the primary and secondary sides during cascade processing in ITEM032 (bumpless processing between primary/secondary loops) in the Basic PID block (Block Model 011) and Advanced PID block (Block Model 012). The primary side MV1 is overwritten with the Local Set Point of the self node when the secondary side is local merely by setting 1 (bumpless processing ON) to ITEM032 of the Basic PID or Advanced PID block on the secondary side.

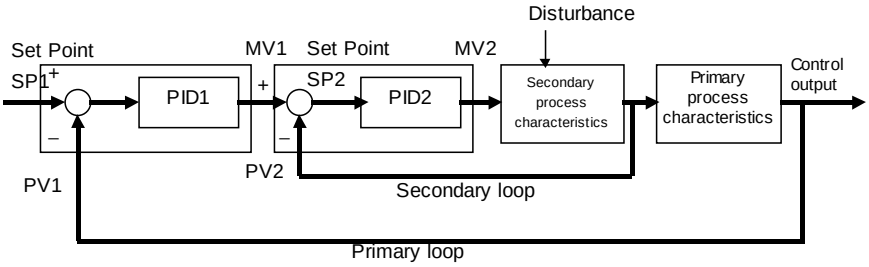

Example

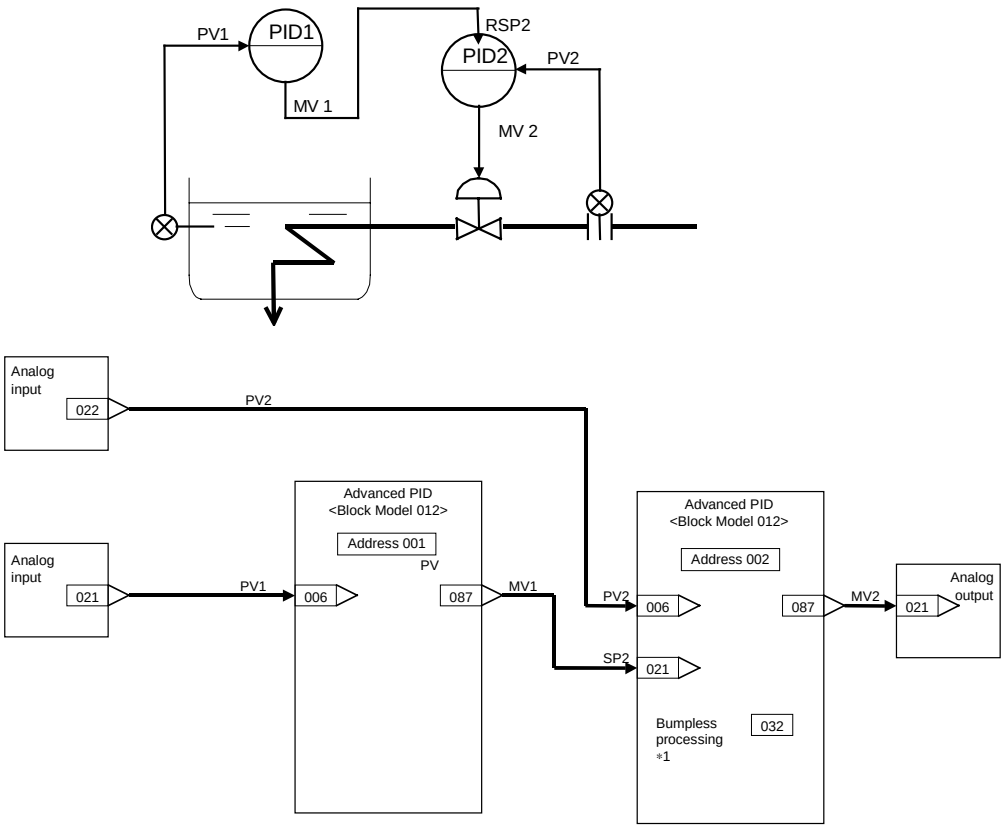

*1: The self node overwrites the actual Local Set Point 2 value with primary side MV1 when the self node is the local node by setting bumpless output to 1 (ON).

Block address	ITEM No.	Data	Explanation
901	002	586	AI 4-point Terminal block
	021		Y1 (analog input 1)
	022		Y2 (Analog input 2)
902	002	587	AO 4-point terminal block
	021	002087	X1 (analog output 1) source designation
	031		X1 (analog output 1)
001	002	012	Advanced PID block
	006	901021	PV source designation
	087		MV
002	002	012	Advanced PID block
	006	901022	PV source designation
	021	001087	RSP source designation
	032	1	Bumpless processing between primary/secondary loops ∗1
	087		MV

∗1: By this function, the value of the secondary loop LSP2 is forcibly written over the primary loop MV1 when the secondary loop is set to Local.

Note 3 As shown above, the function of ITEM032 (bumpless processing between primary/secondary loops) of the Basic PID block (Block Model 011) or Advanced PID block (Block Model 012) can be used to enable switching of primary loop MV1 to the secondary loop LSP2 when the secondary loop is set to Local.

However, control is as follows when the primary loop MV1 must be switched to the secondary loop PV2 when the secondary loop is set to Manual.

When the secondary loop is set to Manual, turn the primary loop MV tracking switch ON and use the secondary loop PV2 to switch the primary loop MV1 to this PV2. The following shows an example of this.

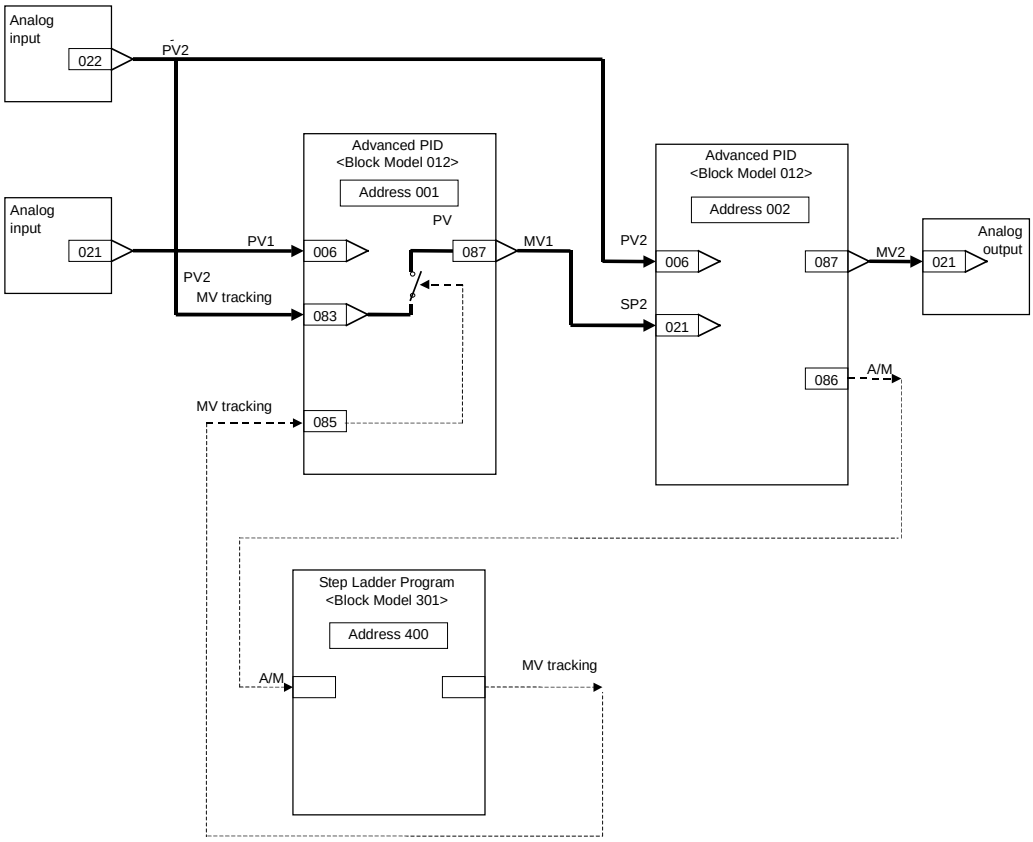

Ladder in Step Ladder Program block

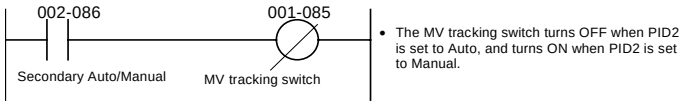

5-2-2 Feedforward Control

Before the influence of disturbances such as load fluctuation appears in the process result, disturbance is detected beforehand to correct MV so that its influence is canceled. Feedforward control is used in combination with feedback control.

Function block used: Lead/Delay (Block Model 147)

Example

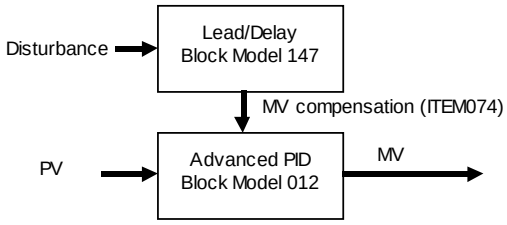

The output of the Lead/Delay block is added to the MV output of the Advanced PID block.

Note 1 Though cascade control can suppress the influence of disturbance on the secondary loop, it cannot suppress the influence of disturbance on the primary loop. Whereas, feedforward control can suppress the influence of disturbance on the primary loop in cascade control.

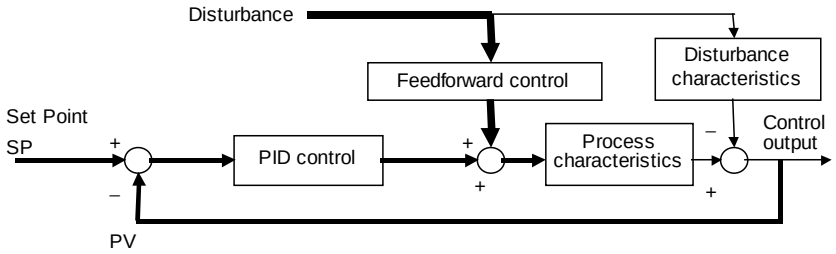

Note 2 A general feedforward control model is obtained by dividing the disturbance characteristics by the process characteristics. The transfer function of feedforward control is as follows when the disturbance characteristic is K2/(T+T2•s) as its transfer function is approximated by the first-order lag, and the process characteristic is K1/(1+T1•s) as its transfer function is approximated by the first-order lag:

K2/K1 x (1+T1•s) / (1+T2•s)

where,

T1: Time constant of process

T2: Time constant of disturbance

K1: Process gain

K2: Disturbance gain

The step response in this model is as follows:

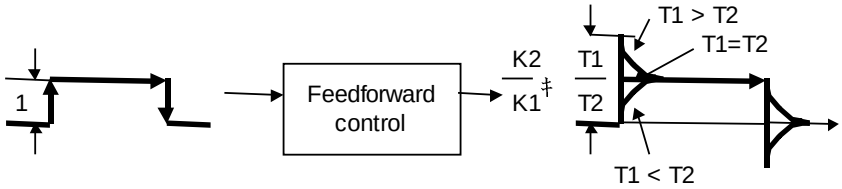

As shown above, when T1 (time constant of process) is longer than T2 (time constant of disturbance) (T1>T2), a lead is applied to the feedforward control signals (lead compensation). Alternatively, when T1<T2, a delay is applied to the feedforward control signals (delay compensation).

To minimize the influence of disturbance in feedforward control, the values of T1 (time constant of process) and T2 (time constant of disturbance) must be set to the appropriate values.

Set T1 (time constant of process = time constant of lead), T2 (time constant of disturbance = time constant of delay) and K (disturbance gain and process gain) in the Lead/Delay block (Block Model 147).

Example

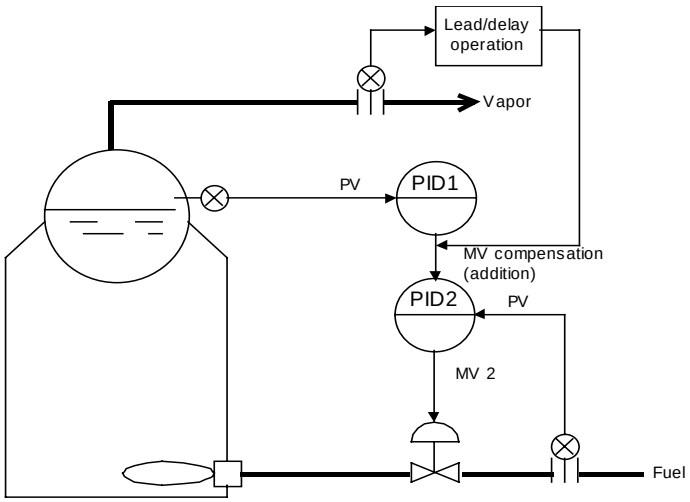

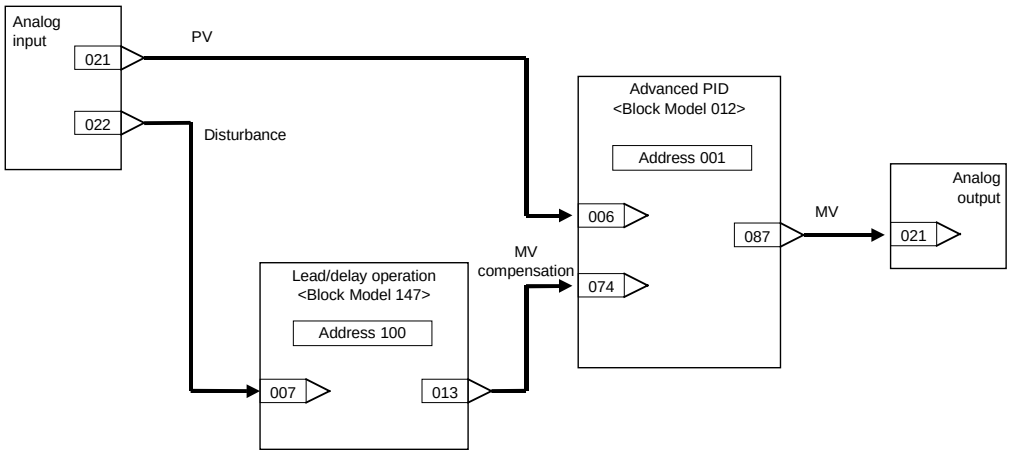

Block address	ITEM No.	Data	Explanation
901	002	586	AI 4-point Terminal block
	021		Y1 (analog input 1)
	022		Y2 (analog input 2)
902	002	587	AO 4-point terminal block
	021	001087	X1 (analog output 1) source designation
	031		X1 (analog output 1)
001	002	012	Advanced PID block
	006	901021	PV source designation
	074	100013	MV compensation (addition)
	087		MV
100	002	147	Lead/delay operation blocks
	007	901022	X1 source designation
	009		K (gain) 0 to 10.000
	010		T1 (lead time constant) 0 to 999.9 s
	011		T2 (delay time constant) 0 to 999.9 s
	013		Y1 output value

Note 3 Noninteracting Control

Noninteracting control suppresses mutual action between processes, and is the same as feedforward control. Influence caused by mutual action is regarded as disturbance, and is controlled by noninteracting control together with feedforward control.

Function blocks used: Advanced PID (Block Model 012)

Lead/Delay (Block Model 147)

Note 4 Processing by which the value after lead/delay operation is subtracted from other MVs is enabled by the MV compensation function of advanced PID.

Example

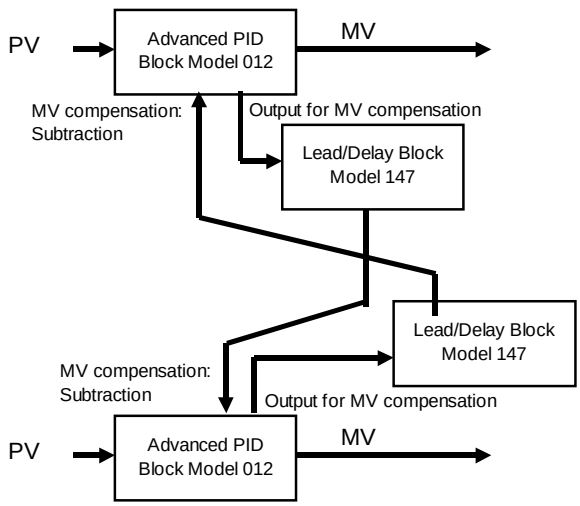

Note 5 Noninteracting control elements generally are one cause of lag.

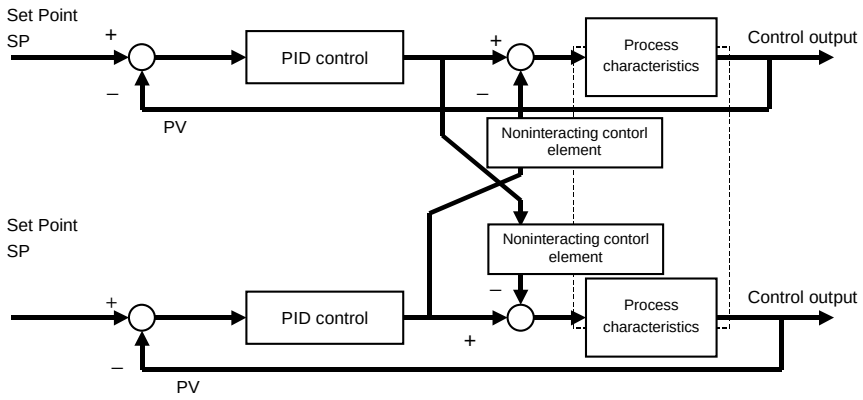

5-2-3 Sample PI Control

When processes with prolonged dead time or an ON/OFF measurement analyzer are taken as the control finite element, the next manipulated variable is determined after the effect of having changed the manipulated variable has sufficiently manifested itself.

PI control for time T1 is performed at every time T0, and resulting output is held at a fixed value.

This is also called the "wait and see" method.

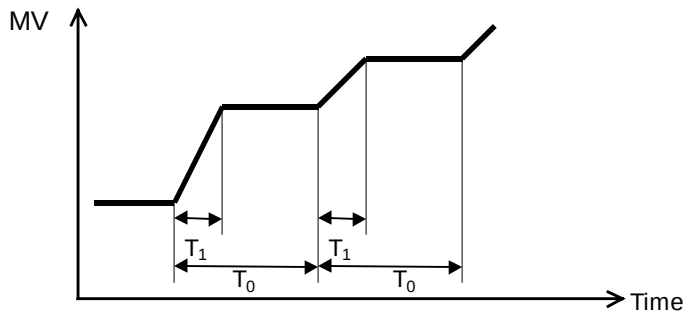

Function blocks used: ON/OFF Timer (Block Model 206)

Contact Distributor (Block Model 201)

(Step Ladder Program [Block Model 301] as necessary)

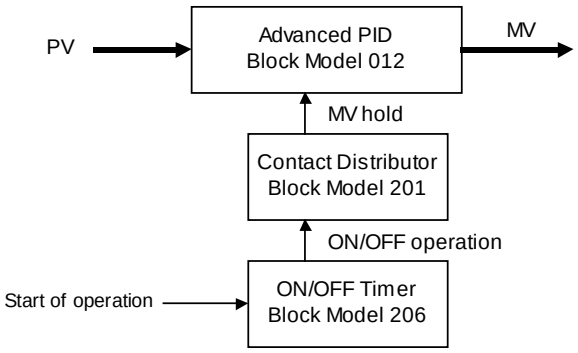

The contact signals from the ON/OFF Timer block are connected to the MV hold input of the Advanced PID block.

Note In processes where the dead time changes according to certain conditions, make the hold time variable according to those conditions. (PI control of variable sample cycle). In this case, set the ON time (T1) of the ON/OFF timer by other function blocks.

Example

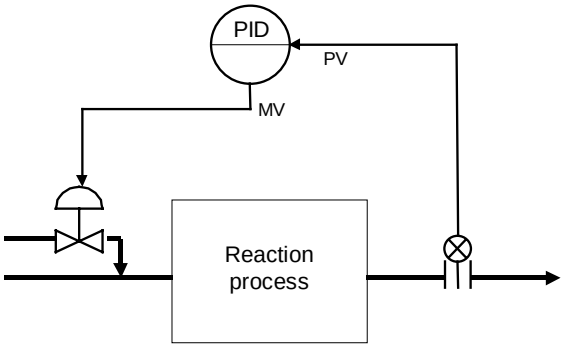

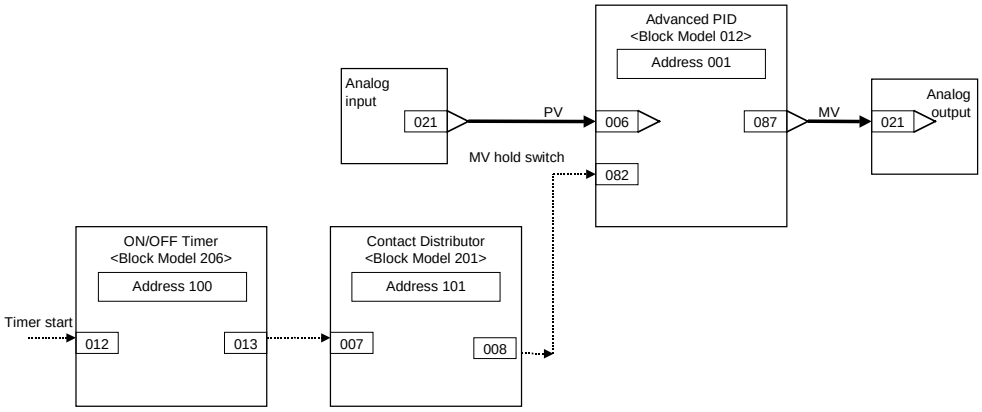

Block address	ITEM No.	Data	Explanation
901	002	586	AI 4-point Terminal block
	021		Y1 (analog input 1)
902	002	587	AO 4-point Terminal block
	021	001087	X1 (analog output 1) source designation
	031		X1 (analog output 1)
001	002	012	Advanced PID block
	006	901021	PV source designation
	082		MV hold switch
	087		MV
100	002	206	ON/OFF Timer block
	013		Contact output
101	002	201	Contact Distributor block
	007	100013	Source designation (ITEM013 of ON/OFF timer is entered.)
	008	001082	Destination designation (output to ITEM082 of Advanced PID)

5-2-4 Dead Time Compensation

In processes having a large dead time that does not change much, the control target is regarded and controlled as a process not having a dead time by canceling the dead time element equivalent to the process on the PC. Dead time compensation cannot adapt to disturbances such as load fluctuations.

Function block used: Dead Time Compensation (Block Model 149)

Example

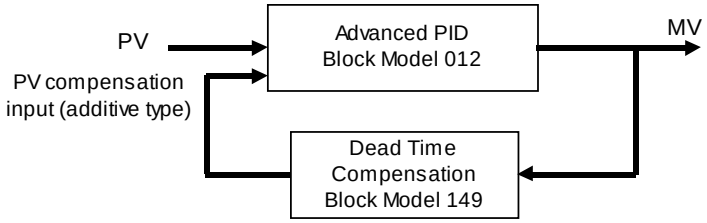

Dead time compensation is performed on the MV output from the Advanced PID block, and the result is connected to the PV compensation input of the Advanced PID block. The PV compensation mode is set to "add".

Note 1 Before dead time compensation is performed, the dead time, time constant and gain of the target process must be investigated.

Note 2 By dead time compensation control, dead time compensation is performed on MV as shown below and the result is added to the PV of PID control.

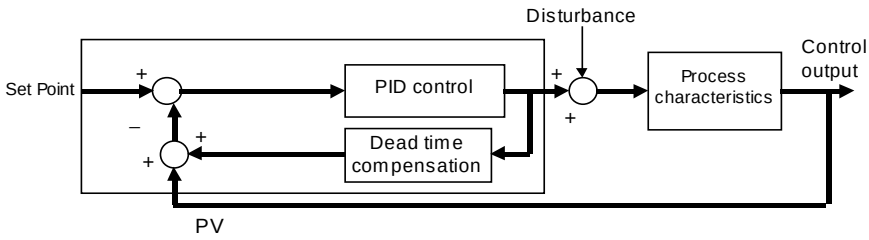

As dead time L worsens controllability, control is performed on process K/(1+Ts) not having dead time element (e^{-Ls}) by compensating the dead time element within the PC.

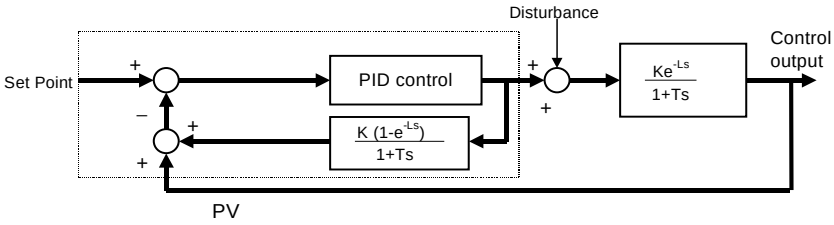

The Dead Time Compensation block (Block Model 149) inputs MV for K (1-(e^{-Ls}) ÷ (1+Ts), and outputs the result to ITEM047 (PV compensation) of Advanced PID block (Block Model 012). The PV compensation mode is set to "add". The Dead Time Compensation block (Block Model 149) sets K (process gain), T (time constant of process) and L (dead time) to equal H (sampling cycle) multiplied by N (number of samples). Set MV to manual, apply step changes to the process, and calculate these constants from the changes in PV.

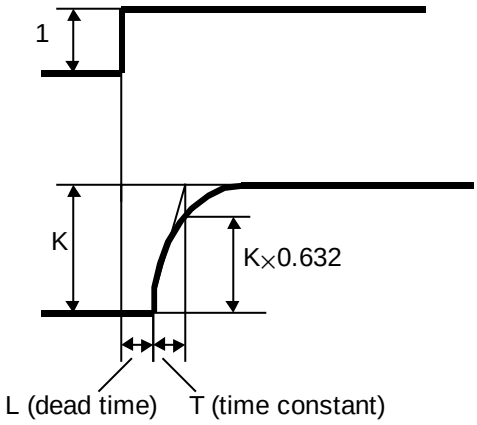

Example

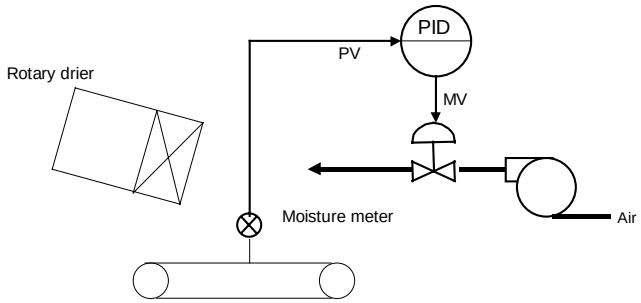

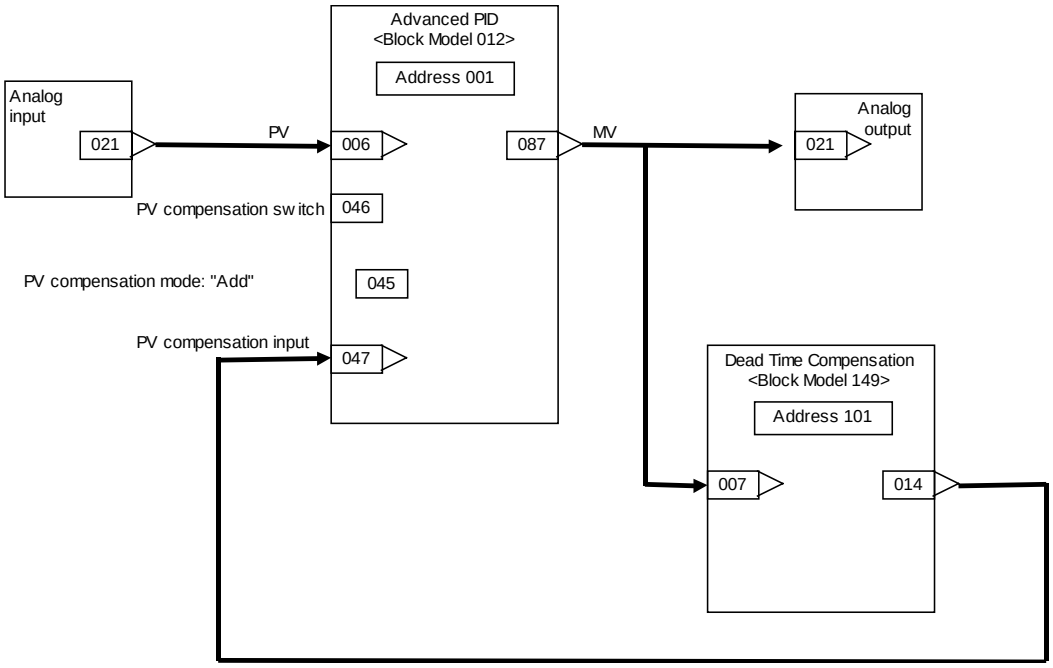

Block address	ITEM No.	Data	Explanation
901	002	586	AI 4-point Terminal block
	021		Y1 (analog input 1)
902	002	587	AO 4-point Terminal block
	021	001087	X1 (analog output 1) source designation
	031		X1 (analog output 1)
001	002	012	Advanced PID block
	006	901021	PV source designation
	045	1	PV compensation system (add)
	046		PV compensation switch
	047	100014	PV compensation input source designation
	087		MV
100	002	149	Dead Time Compensation block
	007	001087	X1 source designation
	009		K (gain) 0 to 10.000
	010		T (lead time constant) 0 to 999.9 s
	011		H (sampling cycle) 0 to 9999 s
	012		N (number of samples) 0 to 20
	014		Y1 output value

SECTION 6
How to Use FINS Commands

6-1 HOW TO USE FINS COMMANDS 174

6-2 FINS COMMAND LIST 177

6-3 DESCRIPTION OF FINS COMMANDS..... 178

6-1 How to Use FINS Commands

FINS commands can be issued to the Loop Control Unit by one of the following two methods:

1) By the CMND (DELIVER COMMAND) instruction from the CPU Unit
2) By the Host Link or the networked host computer

1) By the CMND (DELIVER COMMAND) instruction from the CPU Unit

FINS commands can be issued to the Loop Control Unit by executing the CMND (DELIVER COMMAND) instruction in the program on the CPU Unit or networked PC (CPU Unit) on which the Loop Control Unit is mounted.

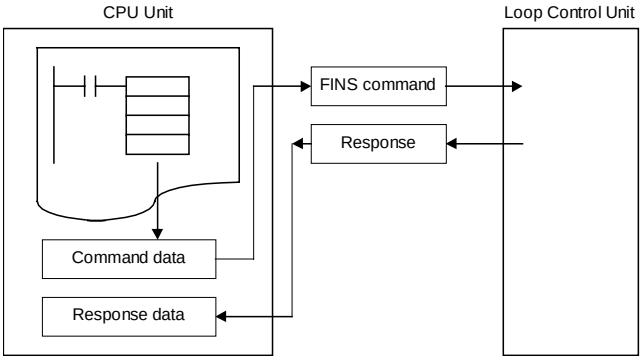

When this method is used, the user need not consider the frame format of the FINS command. Basically, the user executes the following.

1, 2, 3…

1. Store the data in the command format of the FINS command to an I/O memory area such as Data Memory. (S onwards: command data.)
2. Store the number of send data bytes or the addresses of the send destination to the I/O memory area such as Data Memory. (C to C+5: control data)

Note When the FINS command is issued to the Loop Control Unit mounted on the self node, set the send destination network address to 00 Hex (self network) and the send destination node address to 00 Hex (self node).

3. Specify S (first command word number), D (first response word number) and C (first control data word) as the operands of the CMND (DELIVER COMMAND) instruction, and execute the CMND instruction.

4. When the FINS response frame is returned from the Loop Control Unit, data conforming to the response format is stored to the response address.
5. The response is then read when the Network Communications Enabled Flag corresponding to the communications port number to be used turns ON.

   For details, refer to items describing the CMND (DELIVER COMMAND) instruction in the *Communications Commands Reference Manual* (Cat. No. SBCA304) or the *CS1 CPU Unit Command Reference Manual* (Cat. No. SBCA-302).

Example To read ITEM007 (PV) at block address 001 (e.g. in the case of Basic PID) on the Loop Control Unit currently mounted on the self node (when the unit number of the Loop Control Unit is 01)

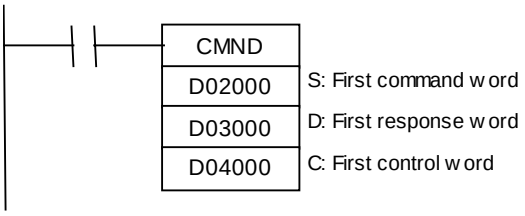

Command data

S	D02000	0 2 4 0	Command code: 0240 (READ MULTIPLE ITEMS FROM FUNCTION BLOCK)
S+1	D02001	0 0 0 1	Block address: 0001
S+2	D02002	0 0 0 1	Number of ITEMs: 1
S+3	D02003	0 0 0 7	Read start address (example: PV of basic PID)

Response data

D	D03000	0 2 4 0	Command code: 0240 (READ MULTIPLE ITEMS FROM FUNCTION BLOCK)
D+1	D03001	Store	End code
D+2	D03002	0 0 0 1	Number of normal read ITEMs: 1
D+3	D03003	0 0 0 7	Read start address: 007
D+4	D03004	0 2 □ □	Data length: 2 bytes
D+5	D03005	□ □	Read data: □ □ □ □

Control data

C	D04000	0 0 0 8	Number of command data bytes: Above eight bytes (0008 Hex)
C+1	D04001	0 0 0 B	Number of response data bytes: 11 bytes (000B Hex)
C+2	D04002	0 0 0 0	Fixed to 00 Hex. Send destination network address
C+3	D04003	0 0 1 1	Send destination node address (00 Hex∗1), Send destination unit address (11 Hex∗2)
C+4	D04004	0 0 0 0	Response required/not required (0 Hex: required), Communications port number (0 Hex), fixed to 0 Hex, re-send count (0 Hex)
C+5	D04005	0 0 0 0	Response monitor time (0000: 2 s default)

∗1: Set to 00 Hex as destination is self node.
∗2: Example where unit number of Loop Control Unit is 01. Set 11 Hex obtained by adding 10 Hex to 01.

2) By the Host Link or the networked host computer

The FINS command frame is sent to the Loop Control Unit delimited by the Host Link header or terminator from the host computer.

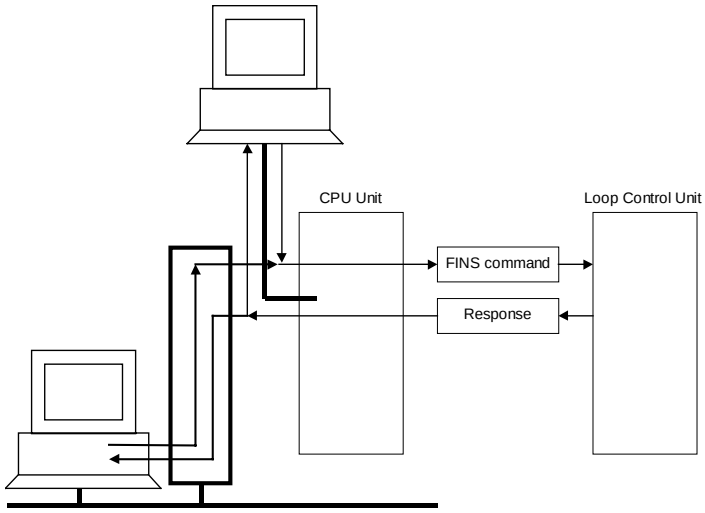

When this method is used, the user needs to consider the frame format of the FINS command.

For details, refer to the *Communications Command Reference Manual* (Cat. No. W342).

6-2 FINS Command List

<table>
<tr><th>Command (Hex)</th><th>Name</th><th colspan="2">Description</th></tr>
<tr><td>0240</td><td>READ MULTIPLE ITEMS FROM FUNCTION BLOCK</td><td>Reads specified continuous (multiple) ITEMs from a single function block.</td><td rowspan="4">Note: Specifiable ITEMs are all ITEMs in all blocks excluding the sequence commands (ITEM011 onwards) of the Step Ladder Program block (Block Model 301).</td></tr>
<tr><td>0241</td><td>WRITE MULTIPLE ITEMS TO FUNCTION BLOCK</td><td>Writes specified continuous (multiple) ITEMs to a single function block.</td></tr>
<tr><td>0242</td><td>READ ITEM FROM MULTIPLE FUNCTION BLOCKS</td><td>Reads specified ITEM from multiple function blocks.</td></tr>
<tr><td>0243</td><td>WRITE ITEM TO MULTIPLE FUNCTION BLOCKS</td><td>Writes specified ITEM to multiple function blocks.</td></tr>
<tr><td>0501</td><td>READ LOOP CONTROL UNIT INFORMATION</td><td colspan="2">Reads the format and version information of the Loop Control Unit.</td></tr>
<tr><td>0801</td><td>ECHOBACK TEST</td><td colspan="2">Performs the echoback test between Loop Control Units.</td></tr>
<tr><td>2102</td><td>READ ERROR LOG</td><td colspan="2">Reads the error log in the Loop Control Unit.</td></tr>
<tr><td>2103</td><td>CLEAR ERROR LOG</td><td colspan="2">Clears the error log in the Loop Control Unit.</td></tr>
</table>

Note All of the following data are expressed in Hex in FINS commands issued to the Loop Control Unit:

Function block address, ITEM number (address), number of ITEMs, number of bytes, write data, etc.

6-3 Description of FINS Commands

This section describes the command and response formats for FINS commands issued to the Loop Control Unit.

READ MULTIPLE ITEMS FROM FUNCTION BLOCK	command code
	02 40

Function

Reads multiple ITEMs from a single function block.

Command format

Data format	Command code		Parameter type (block address)	Number of ITEMs	Read start address	* repeated
	02 Hex	40 Hex				
Data length (bytes)	1	1	2	2	2	—

*

1) Parameter type

Specify function block addresses 0 to 999 within the range 0 to 03E7 Hex.

2) Number of ITEMs

Specify the number of ITEMs to be read from the specified function block.

3) Read start address

Specify ITEM numbers 0 to 999 in the function block specified by parameter type within the range 0 to 03E7 Hex.

Specifiable ITEMs are all ITEMs in all function blocks excluding the sequence commands (ITEM011 onwards) in the Step Ladder Program block (Block Model 301).

Note 1 Specify the read start address for the number of ITEMs.

Response format

Data format	Command code		Response code		Number of normal read ITEMs	Read start address	Data length (byte)	Read data	* repeated
	02 Hex	40 Hex	MRES	SRES					
Data length (bytes)	1	1	1	1	2	2	1	—	—

*

Note 2 When one or more ITEMs has been read correctly, this shall be regarded as a normal completion. By a normal completion, the number of ITEMs that were read correctly and the data of the number of ITEMs that were read correctly (1 to number of ITEMs) are returned as the FINS response.

The length of the read data is expressed in bytes.

Note 3 For details of the data length of each ITEM, refer to the rightmost column "Data length (bytes)" in the ITEM Lists in *Section 2 Description of Function Blocks* in the *Function Block Reference Manual*.

Response code

Response code	Meaning
0000 Hex	Normal completion
1001 Hex	Command length over • The command length exceeds 2002 bytes.
1002 Hex	Insufficient command length • The command length is less than six bytes.
1003 Hex	Number of elements/number of data mismatch • The number of read start addresses does not match the number of ITEMs.
1101 Hex	No type • An unusable block address was specified in the parameter type. • The block address specified in the parameter type is an unregistered function block. • Function blocks other than System Common blocks cannot be accessed as the RAM has not yet been initialized (cleared) after a battery failure causes content of RAM to be lost.
1103 Hex	Specified address out-of-range error • There is not even one ITEM specified by the start address.
110B Hex	Response exceeds maximum response length • The length of the read data section exceeds 968 bytes.
110C Hex	Other item parameter error • Number of ITEMs is 0.

WRITE MULTIPLE ITEMS TO FUNCTION BLOCK	command code
	02 41

Function

Writes multiple ITEMs in a single function block.

Command format

Data format	Command code		Parameter type (block address)	Number of ITEMs	Write start address	Data length (byte)	Write data	* repeated
	02 Hex	41 Hex						
Data length (bytes)	1	1	2	2	2	1	—	—

*

1) Parameter type

Specify function block addresses 0 to 999 within the range 0 to 03E7 Hex.

2) Number of ITEMs

Specify the number of ITEMs to write in the specified function block.

3) Write start address

Specify ITEM numbers 0 to 999 in the function block specified by parameter type within the range 0 to 03E7 Hex.

Specifiable ITEMs are all ITEMs in all function blocks excluding the sequence commands (ITEM011 onwards) in the Step Ladder Program block (Block Model 301).

4) Data length

Specify the number of bytes to write.

Set the data length according to the ITEM to be written to.

Note 1 For details of the data length of each ITEM, refer to the rightmost column "Data length (bytes)" in the ITEM Lists in *Section 2 Description of Function Blocks* in the *Function Block Reference Manual*.

5) Write data

Data to be written to ITEMs in the specified function block

Note 2 Specify the write start address, data length and write data for the number of ITEMs.

Response format

Data format	Command code		Response code	
	02 Hex	41 Hex	MRES	SRES
Data length (bytes)	1	1	1	1

When all ITEMs to be written can be written, and all ITEMs have been written successfully, this shall be regarded as a normal completion.

Response code

Response code	Meaning
0000 Hex	Normal completion
1001 Hex	Command length over • The command length exceeds 2002 bytes.
1002 Hex	Insufficient command length • The command length is less than six bytes.
1003 Hex	Number of elements/number of data mismatch • The number of data items does not match the number of ITEMs.
1101 Hex	No type • An unusable block address was specified in the parameter type. • The block address specified in the parameter type is an unregistered function block. • Function blocks other than System Common blocks cannot be accessed as the RAM has not yet been initialized (cleared) after a battery failure causes content of RAM to be lost.
1103 Hex	Specified address out-of-range error • The start address contains a non-existent ITEM. • An attempt was made to write to the format setting of a System Common block.
110C Hex	Other item parameter error • Number of ITEMs is 0. • The specified data length does not match the actual data of each ITEM specified by the write start address. • The combination of block address and block format is forbidden. • Write data is out of the data range for each ITEM.

READ ITEM FROM MULTIPLE FUNCTION BLOCKS	command code
	02 42

Function

Reads the specified ITEM from multiple function blocks.

Command format

Data format	Command code		Number of ITEMs	Parameter type (block address)	Read start address	* repeated
	02 Hex	42 Hex				
Data length (bytes)	1	1	2	2	2	—

*

1) Number of ITEMs

Specify the number of ITEMs to read.

2) Parameter type

Specify function block addresses 0 to 999 within the range 0 to 03E7 Hex.

3) Read start address

Specify ITEM numbers 0 to 999 in the function block specified by parameter type within the range 0 to 03E7 Hex.

Specifiable ITEMs are all ITEMs in all function blocks excluding the sequence commands (ITEM011 onwards) in the Step Ladder Program block (Block Model 301).

Note 1 Specify the parameter type and read start address for the number of ITEMs.

Response format

Data format	Command code		Response code		Number of normal read ITEMs	Parameter type	Read start address	Data length (byte)	Read data	* repeated
	02 Hex	42 Hex	MRES	SRES						
Data length (bytes)	1	1	1	1	2	2	2	1	—	—

*

Note 2 When one or more ITEMs has been read correctly, this shall be regarded as a normal completion. By a normal completion, the number of ITEMs that were read correctly and the data of the number of ITEMs that were read correctly (1 to number of ITEMs) are returned as the FINS response.

The length of the read data is expressed in bytes.

Note 3 For details of the data length of each ITEM, refer to the rightmost column "Data length (bytes)" in the ITEM Lists in *Section 2 Description of Function Blocks* in the *Function Block Reference Manual*.

Response code

Response code	Meaning
0000 Hex	Normal completion
1001 Hex	Command length over • The command length exceeds 2002 bytes.
1002 Hex	Insufficient command length • The command length is less than four bytes.
1003 Hex	Number of elements/number of data mismatch • The number of read start addresses does not match the number of ITEMs.
1101 Hex	No type • An unusable block address was specified in the parameter type. • The block address specified in the parameter type is an unregistered function block. • Function blocks other than System Common blocks cannot be accessed as the RAM has not yet been initialized (cleared) after a battery failure causes content of RAM to be lost.
1103 Hex	Specified address out-of-range error • There is not even one ITEM specified by the start address.
110B Hex	Response exceeds maximum response length • The length of the read data section exceeds 968 bytes.
110C Hex	Other item parameter error • Number of ITEMs is 0.

WRITE ITEM TO MULTIPLE FUNCTION BLOCKS	command code
	02 43

Function

Writes the specified ITEM to multiple function blocks.

Command format

Data format	Command code		Number of ITEMs	Parameter type (block address)	Write start address	Data length (byte)	Write data	* repeated
	02 Hex	43 Hex						
Data length (bytes)	1	1	2	2	2	1	—	—

*

1) Number of ITEMs

Specify the number of ITEMs to write.

2) Parameter type

Specify function block addresses 0 to 999 within the range 0 to 03E7 Hex.

3) Write start address

Specify ITEM numbers 0 to 999 in the function block specified by parameter type within the range 0 to 03E7 Hex.

Specifiable ITEMs are all ITEMs in all function blocks excluding the sequence commands (ITEM011 onwards) in the Step Ladder Program block (Block Model 301).

4) Data length

Specify the number of bytes to write.

Set the data length according to the ITEM to be written to.

Note 1 For details of the data length of each ITEM, refer to the rightmost column "Data length (bytes)" in the ITEM Lists in *Section 2 Description of Function Blocks* in the *Function Block Reference Manual*.

5) Write data

Write data to be written to the ITEM of the specified function block

Note 2 Specify the parameter type, write start address, data length and write data for the number of ITEMs.

Response format

Data format	Command code		Response code	
	02 Hex	43 Hex	MRES	SRES
Data length (bytes)	1	1	1	1

When all ITEMs to be written can be written, and all ITEMs have been written successfully, this shall be regarded as a normal completion.

Response code

Response code	Meaning
0000 Hex	Normal completion
1001 Hex	Command length over • The command length exceeds 2002 bytes.
1002 Hex	Insufficient command length • The command length is less than four bytes.
1003 Hex	Number of elements/number of data mismatch • The number of data items does not match the number of ITEMs.
1101 Hex	No type • An unusable block address was specified in the parameter type. • The block address specified in the parameter type is an unregistered function block. • Function blocks other than System Common blocks cannot be accessed as the RAM has not yet been initialized (cleared) after a battery failure causes content of RAM to be lost.
1103 Hex	Specified address out-of-range error • The start address contains a non-existent ITEM. • An attempt was made to write to the format setting of a System Common block.
110C Hex	Other item parameter error • Number of ITEMs is 0. • The specified data length does not match the actual data of each ITEM specified by the write start address. • The combination of block address and block format is forbidden. • Write data is out of the data range for each ITEM.

READ LOOP CONTROL UNIT INFORMATION	command code
	05 01

Function

Reads the model number and version information of the Loop Control Unit.

Command format

	Command code	
Data format	05 Hex	01 Hex
Data length (bytes)	1	1

Response format

	Command code		Response code		Block Model	Version
Data format	05 Hex	01 Hex	MRES	SRES		
Data length (bytes)	1	1	1	1	20	20

1) Model number

The format comprising up to 20 ASCII code characters beginning from the left is returned. The model number is filled with spaces (20 Hex) from the right if less than 20 characters.

The model number of the Loop Control Unit is "CS1W-LC001."

2) Version

The version of the system program comprising up to 20 ASCII code characters beginning from the left is returned. The model number is filled with spaces (20 Hex) from the right if less than 20 characters.

The version returned looks as if it has two versions "V1.00V1.00". The former version is the version of the system program stored in MPU built-in ROM, and the latter is the version stored in flash ROM.

Response code

Response code	Meaning
0000 Hex	Normal completion
1001 Hex	Command length over • The command length exceeds two bytes.

ECHOBACK TEST	command code
	08 01

Function

Performs an echoback test with the Loop Control Unit. This test is used to check whether or not FINS protocol communications with the Loop Control Unit is functioning normally.

Command format

	Command code		Test data
Data format	08 Hex	01 Hex	
Data length (bytes)	1	1	Bytes 1 to 1998

1) Test data

Any test data

Response format

	Command code		Response code		Test data
Data format	08 Hex	01 Hex	MRES	SRES	
Data length (bytes)	1	1	1	1	Same as test data of command

2) Test data

Same data as the test data assigned by the command

Response code

Response code	Meaning
0000 Hex	Normal completion
1001 Hex	Command exceeds maximum command length • The command length exceeds 2000 bytes.
1002 Hex	Insufficient command length • Command length is less than three bytes.

READ ERROR LOG	command code
	21 02

Function

Reads the error log on the Loop Control Unit.

The configuration of each error log is as follows, and error logs are stored in RAM (battery-backed up) on the Loop Control Unit. The configuration of each error log is as follows and is regarded as a single record. For details on error codes, see *7-1 Errors and Alarm Troubleshooting*.

1 record	Error code
	Detailed information
	Date (year/month) and time (hour/minute/second) of occurrence

Command format

Data format	Command code		Read start record number	Number of read records
	21 Hex	02 Hex		
Data length (bytes)	1	1	2	2

1) Read start record number

Specify the first record number to read in Hex.

The first record number (oldest record) is 0000 Hex.

2) Number of read records

Specify the number of records to read in Hex from 0000 onwards.

Response format

Data format	Command code		Response code		Maximum number of stored records	Number of stored records	Number of read records	
	21 Hex	02 Hex	MRES	SRES				
Data length (bytes)	1	1	1	1	2	2	2	

Data format	Error code	Detailed information	Minute	Second	Date	Hour	Year	Month
Data length (bytes)	2	2	1	1	1	1	1	1

1 record

1) Maximum number of stored records

The maximum number of error logs that can be stored is returned in Hex.

2) Number of stored records

The number of error log records currently stored at the time of command execution is returned in Hex.

3) Number of read records

The actual number of read records is returned in Hex.

4) Error code

Indicates the error details as a code. For details on error codes, see *7-1 Errors and Alarm Troubleshooting*.

5) Detailed information

Indicates the detailed information of the error. For details on error codes, see *7-1 Errors and Alarm Troubleshooting*.

6) Minutes, seconds, day, hours, year, month

All values are expressed in BCD (Binary-Coded Decimal).

Item	Range
Minute	0 to 59
Second	0 to 59
Day	1 to 31
Hour	0 to 23
Year	0 to 99 (lower 2 digits)
Month	1 to 12

Response code

Response code	Meaning
0000 Hex	Normal completion
1001 Hex	Command length over • The command length exceeds six bytes.
1002 Hex	Insufficient command length • Command length is less than six bytes.
1103 Hex	Specified address out-of-range error • The read start record No. was specified for the number of currently stored records or more. (excluding 0000 Hex)
110C Hex	Other item parameter error • Number of read records is 0.

Note When there is no error log data for the number of read records, the records currently stored are read, and 0000 Hex (normal completion) is taken as the response code.

CLEAR ERROR LOG	command code
	21 03

Function

Clears the error log on the Loop Control Unit.

Command format

Data format	Command code	
	21 Hex	03 Hex
Data length (bytes)	1	1

Response format

Data format	Command code		Response code	
	21 Hex	03 Hex	MRES	SRES
Data length (bytes)	1	1	1	1

Response code

Response code	Meaning
0000 Hex	Normal completion
1001 Hex	Command length over • The command length exceeds two bytes.
250F Hex	Memory write error • Error log could not be cleared successfully.

SECTION 7
Errors and Alarm Troubleshooting

7-1 ERRORS AND ALARM TROUBLESHOOTING 192

7-1-1 Judging Errors by Indicators 192
7-1-2 Error Log Data 195
7-1-3 System Information 195
7-1-4 Execution Error Code List 196

7-2 MAINTENANCE 199

7-2-1 Replacing the Loop Control Unit 199
7-2-2 Using the flash memory 200
7-2-3 How to Replace the Battery 202

7-1 Errors and Alarm Troubleshooting

7-1-1 Judging Errors by Indicators

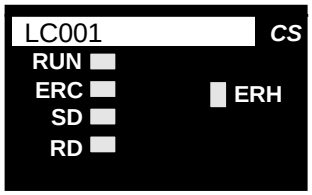

Indication	Name	Color	State	Description
RUN	CPU Unit running	Green	Out	• System stopped A probable cause is one of the following: • Initialization of unit in progress • Unit hardware trouble • No power supply from power supply unit • Unit WDT error • Operation of Loop Control Unit stopped (A probable cause is one of the following:) - Regular operation stopped - CPU Unit run stop error - CPU Unit in standby mode - Load rate exceeded at operation cycle of 2 s (Operation Cycle Automatic Switching Generation flag ON)
			Lit	• Loop Control Unit running
ERH	CPU Unit error	Red	Out	• No CPU Unit error
			Lit	• CPU Unit error
ERC	Loop Control Unit error	Red	Out	• No error
			Lit	• Error
			Blinking	• Battery error (Only when DIP switch pin 2 is OFF)
SD	Not used	—	—	—
RD	Not used	—	—	—

Errors that occur during initial processing (at CPU Unit power ON or restart of the Loop Control Unit)

LED			Item	Cause	State	Error code (stored as error log data)	Remedy
RUN	ERH	ERC					
Out	Lit	Out	Unit number setting error	1) The same unit number has been specified twice or more on the same CPU Unit.	All functions stopped	None	1) Set the correct unit number, and turn the power back ON again.
				2) The unit number is not registered to CPU Unit I/O table.		0006 detailed code: 0800	2) Prepare an I/O table.
				3) Failed to recognize the CPU Unit		None	3) Replace the Loop Control Unit if ERH lights even if mounted on a different CPU Unit.
				4) Error occurred during initial processing on CPU Unit.		000F	4) Refer to the *CPU Unit Operation Manual*.
Out	Lit	Lit	Initial recognition error	Failed to recognize the CPU Unit	All functions stopped	None	Replace the Loop Control Unit if ERH/ERC light even if mounted on a different CPU Unit.
Out	Out	Lit	Unit error	Hardware malfunction such as memory malfunction was detected during the self-diagnostic test.	All functions stopped	None	Replace the Loop Control Unit if ERC lights even if mounted on a different CPU Unit.
Out	Out	Out	Power supply failure	1) The correct internal power is not being supplied to the Loop Control Unit.	All functions stopped	None	1) Check the power voltage, and supply the correct power. Or, check the total current consumption of the PC.
				2) The unit is not properly fixed to the Backplane.			2) Firmly fix the Loop Control Unit on the Backplane.
				3) The unit is malfunctioning.			3) Replace the Loop Control Unit if LED goes off even if mounted on a different CPU Unit.
(not related)	(not related)	Lit	Function block database error	1) Drop in internal battery power voltage or battery not mounted (Only when DIP switch pin 2 is OFF)	All functions stopped Running stopped	0331 Detailed code: Block address. FFFF indicates that the entire database is in error.	1) Check the battery connection. If the connection is normal, replace the battery. Then execute initialization using CX-Process Tool.
				2) Data corruption caused by noise	In the case of only a partial error, running is stopped only at the function block in question.		2) Set the data again to the function block in question using CX-Process Tool.

Error that occur during regular running

LED			Item	Cause	State	Error code (stored as error log data)	Remedy
RUN	ERH	ERC					
Lit	Out	Out	Normal	CPU Unit running		None	
Out	Out	Out	Normal or load rate exceeded at operation cycle of two seconds	Running stopped One of the following:		None	
				• Regular running stop			
				• Fatal error on CPU Unit	Running stopped		Cancel the fatal error referring to the CPU Unit Operation Manual.
				• CPU Unit in standby mode			Cancel the standby mode referring to the CPU Unit Operation Manual.
				• Load rate exceeded at operation cycle of 2s (Operation Cycle Automatic Switching Generation flag is ON)	1) Running stopped 2) ITEM068 of System Common block is 1 (ON).		Add on another Loop Control Unit, and distribute processing between Loop Control Units.
(not related)	(not related)	Lit	Function block database error	Data corruption caused by noise	1) Running stopped 2) In the case of only a partial error, operation is stopped only at the function block in question.	0331 Detailed code: Block address. FFFF indicates that the entire database is in error.	Execute initialization using CX-Process Tool. Set the data again to the function block in question using CX-Process Tool.
(not related)	(not related)	Blinking	Battery error	Battery not mounted or drop in internal battery power voltage (Only when DIP switch pin 2 is OFF)	Running continued	0330	Check the battery connection. If the connection is normal, replace the battery.
(not related)	Lit	(not related)	CPU Unit error	One of the following errors occurred on the CPU Unit: 1) WDT error 2) Cyclic monitoring error 3) Bus error	Running stopped	1) 0001 2) 0002 3) 000E	Refer to the *CPU Unit Operation Manual*.

7-1-2 Error Log Data

The configuration of error log data including error codes is as follows. Error log data is stored in RAM (battery-backed up) on the Loop Control Unit. The configuration of each error log is as follows and is regarded as a single record.

Error log data is not stored in flash memory.

RAM can hold up to 256 of the latest records:

1 record	Error code
	Detailed information
	Date (year/month) and time (hour/minute/second) of occurrence

Error log data can be read using the FINS (READ ERROR LOG, [command code 2102 Hex]) command.

7-1-3 System Information

When operation of the Loop Control Unit is started, the unit address and run status of the Loop Control Unit, and other system information is reflected in the first 24 words (eight words per Loop Control Unit) of the Data Memory for the Node Terminals. The leading addresses are allocated by ITEM043 (start address of Data Memory (D) for Node Terminals) in the System Common block (Block Model 000).

The following information is stored to the leading 24 words of Data Memory for the Node Terminals.

	Offset address	Data description	Data location		Default address in I/O memory for block address 000
			Block address	ITEM	
LCU number: 0	+0	Unit address	000	041	D16020
	+1	Loop Control Unit run status			D16021
	+2	CPU Unit run status		007 to 013	D16022
	~				~
	+7	Data update check code			D16027
LCU number: 1	+0	Unit address	000	041	D16028
	+1	Loop Control Unit run status			D16029
	+2	CPU Unit run status		007 to 013	D16030
	~				~
	+7	Data update check code			D16035
LCU number: 2	+0	Unit address	000	041	D16036
	+1	Loop Control Unit run status			D16037
	+2	CPU Unit run status		007 to 013	D16038
	~				~
	+7	Data update check code			D16043

7-1-4 Execution Error Code List

- The execution error codes shown in the list below are stored in ITEM003 of each function block.
- When there are function blocks containing an error other than 0 (normal), the smallest block number in these function block numbers is stored to ITEM093 of the System Common block (Block Model 000).
- The following information can be checked in the Monitor Run Status screen on CX-Process Tool ([Execute]-[Run]-[Validate Action]):
  - Smallest block address where execution error occurred (ITEM093 of System Common block)
  - Execution error codes that occurred at each function block address (smallest code No. when multiple execution errors occur at a single function block) in the Detailed display screen

Code	Description	Explanation	Operation at error	Remedy
0	Normal			
1	Connection terminal/output terminal connection not defined	Either the function block is not registered to the block address of the source designation or the destination, or the ITEM number does not exist.	Running of the function block in question is stopped, and the functions in question do not operate normally.	Check the block address and ITEM number of the source designation or destination designation.
2	Default error	When run/stop command S1 turned ON in the ramp program or segment program, the reference input was outside the rise ramp range.	The program is not started.	Check the connection of the reference input and program settings.
3	Variable value error	A constant between A1 and A8 or an intermediate buffer between B1 and B4 that is used in the conditional statement for Arithmetic Operation (Block Model 126) is not defined.	Execution of the Arithmetic Operation block will be stopped.	Set definitions for all constants A1 to A8 and an intermediate buffers B1 to B4 that are used.
10	Operation process: Division by "0"	An attempt was made to execute division by a "0" denominator in the operation process.	In the case of Multiplication, DI/AI Terminal from CPU Unit, DI/AI Terminal from Expanded CPU Unit or Field Terminal blocks, the maximum value is output. In the case of the Segment Linearizer or Temperature and Pressure Correction blocks, the previous data is retained.	In the case of DI/AI Terminal from CPU Unit, DI/AI Terminal from Expanded CPU Unit or Field Terminal blocks, check the scaling value, and in the case of the Segment Linearizer block, check the setting value of the input coordinate side. In the case of temperature and pressure correction, check the gain bias value.
11	Operation process: Operation out of restricted value	The output value of the operation result exceeded the data length of two bytes. Note: An error does not occur even if the output range (±320.00, e.g) is exceeded if the data length of two bytes is not exceeded.	Output becomes the maximum value or minimum value of the output range. (For example, when the output range is ±320.00, the output becomes +320.00 or 320.00.)	If there is a problem, review the settings of related ITEMs.
12	Arugument beyond definition	An argument used in Arithmetic Operation (Block Model 126) is beyond the definition.	Execution of the Arithmetic Operation block will be stopped.	Check the range of the arguments and correct the conditional statement or calculation expressions.
15	AT error	A limit cycle cannot be generated for Basic PID (Block Model 011) or Advanced PID (Block Model 012) or suitable PID constants cannot be	Execution of the relevant block will be stopped.	Check the following AT parameters: ITEM 036 to ITEM 040. Also, set ITEM 051 to 2 s or less.

Code	Description	Explanation	Operation at error	Remedy
		calculated.		
19	Inappropriate operation	Two or more S1 to S3 select switches are set to 1 (ON) at the same time in the 3-output Selector block (Block Model 163) or 3-input Selector block (Block Model 164).	The output value that was active before the error occurred is held.	Re-program the Step Ladder Program block so that S1 to S3 select switches are set to 1 (ON) independent of each other.
		There is a syntax error in Arithmetic Operation (Block Model 126), the THEN or ELSE expression is not defined, or the output reverse scaling limits are not set.	Execution of the Arithmetic Operation block will be stopped.	Check the contents of the conditional statement and calculation expressions an check the settings of the output reverse scaling limits.
		There are syntax errors in the membership functions or rules for the Fuzzy Logic block (Block Model 016) making execution impossible. a) A value does not have one sign character and 5 or fewer numeric characters (e.g., when a + sign is included). b) Values are not separated by colons. c) The values that have been set are insufficient. d) There are more than three critical points in a membership functions. e) Critical points in membership functions do not rise to the right. f) Membership functions are not set for labels specified in rules (NL, NS, ZR, PS, PL).	Operation of the Fuzzy Logic block will stop.	Check the membership functions and rules. The ITEM number where the problem occured is given in ITEM 006 (Operation Error Details).
20	Download terminal data exchange error	Data exchange with the CPU Unit is not being executed correctly on the CPU Unit Terminal, Expanded CPU Unit Terminal, Node Terminals and Field Terminal blocks.	The data of the function block in question is not updated.	If a malfunction has occurred on the CPU Unit, follow the remedy for that error. If the CPU Unit is normal, turn ON the power supply again.
21	I/O memory address out-of-range	An address out of the I/O memory address range has been specified on the CPU Unit Terminal, Expanded CPU Unit Terminal, Node Terminals and Field Terminal blocks.	Operation of the function block in question is stopped.	On the CPU Unit Terminal and Expanded CPU Unit Terminal blocks, check the leading address, and on field terminals check the setting of the CIO (channel I/O) Area number setting. In the case of Node Terminals, check the setting of the "leading address of the memory for the node terminals" specified by System Common block ITEM043.
29	Reception error for external device	A communications frame error was generated by the data received from an ES100X Controller for an ES100X Controller Terminal (Block Model 045). (An FCS check error or frame error occured 3 times in a row.	Communications will be stopped with the specified ES100X and tried with another ES100X.	Check the communications path and the communications settings (7 data bits, even parity, and 2 stop bits).
30	Response timeout	A response was not returned after sended data to the Controller for a ES100X Controller Terminal (Block Model 045). (Reponse was not returned for 5 s 3 times.)	Communications will be stopped with the specified ES100X and tried with another ES100X.	Check the communications path, the communications settings (7 data bits, even parity, and 2 stop bits), and other required settings in the ES100X (parameter setting mode, unit number, etc.).

Code	Description	Explanation	Operation at error	Remedy
31	Controller unit number duplicated	The unit number set in ITEM 006 for a ES100X Controller Terminal (Block Model 045) is the same as another ES100X Controller Terminal. (A reponse timeout will occur if the unit number does not exist.)	Communications will be stopped with the ES100X Controllers.	Change the unit number settings (ITEM 006)so that each is used only once.
70	Illegal combination of function blocks	The function block on the primary loop side is not basic PID or advanced PID when bumpless processing between primary/secondary loops was specified in basic PID or advanced PID.	Running of the function block in question is stopped.	Check the function block model number on the primary loop side.
71	Inappropriate parameter	a) When restricted conditions are applied across two ITEMs: (example: when the unit pulse output is equal to or greater than the operation cycle when there is unit pulse output in run time accumulation) b) An attempt has been made to write out-of-range data at the ITEM Setting block.	a) The function block in question is not executed. b) Data cannot be written.	Check the settings of the ITEMs.
80	Step Ladder Program command error	There is an irrelevant command in the Step Ladder Program, or the method of use of commands is wrong, for example, there is an AND command even though there is no input command.	The command in question and onwards are not executed.	Check the program within the Step Ladder Program block.
81	Step Ladder Program source designation not defined	Either the function block is not registered to the block address currently specified by each command in the Step Ladder Program, or the ITEM number does not exist.	The command in question and onwards are not executed.	Check the block address and ITEM number.
89	Overuse of Step Ladder Program differentiated instruction	The number of differentiated instructions to be simultaneously executed has exceeded 256.	Differentiated instructions exceeding 256 instructions are not executed.	Reduce the number of differentiated instructions to be executed simultaneously.

7-2 Maintenance

7-2-1 Replacing the Loop Control Unit

Follow the procedure below to replace the Loop Control Unit.

When the same function block file (appended by the .ist extender) as the function block data on the Loop Control Unit is held in storage

To use the parameters (on the Loop Control Unit that is to be replaced) that were set on CX-Process Monitor

1, 2, 3…

1. Turn power OFF to the PC.
2. Establish the connection between CX-Process Tool and the CPU Unit.
3. Turn power ON to the PC.
4. Read the same function block file (that was set aside and appended with the .ist extension) as the data on the Loop Control Unit to be replaced from hard disk or other storage medium using CX-Process Tool.
5. To check whether or not the file is the same as that on the Loop Control Unit, use CX-Process Tool to verify only CX-Process Tool default data between the Loop Control Unit and the function block file that has been read.
6. Upload the function block data from the Loop Control Unit. Parameters that have been set on CX-Process Monitor are read.
7. Turn power OFF to the PC.
8. Replace the Loop Control Unit.
9. Turn power ON to the PC.
10. Use CX-Process Tool to download the function block file whose parameters were read to the Loop Control Unit.
11. Save the function block file whose parameters were read to hard disk or other storage medium.
12. Check the Loop Control Unit again for any malfunction.

When the parameters (on the Loop Control Unit to be replaced) that were set on CX-Process Monitor are not to be used

1, 2, 3…

1. Turn power OFF to the PC.
2. Replace the Loop Control Unit.
3. Establish the connection between CX-Process Tool and the CPU Unit.
4. Turn power ON to the PC.
5. Use CX-Process Tool to download the function block file (appended with the .ist extension) that was set aside in the hard disk or other storage medium to the Loop Control Unit.

6. If necessary, use CX-Process Tool to compare all function block files to check whether or not the download has been executed successfully.
7. Check the Loop Control Unit again for any malfunction.
8. Use CX-Process Monitor to set the parameters.

When the same function block file (appended with the .ist extender) as the function block data on the Loop Control Unit is not set aside

Note The same function block file (appended with the ist. extender) as the function block data on the Loop Control Unit is needed to read the function block data on the Loop Control Unit. If the same function block file (appended with the ist. extender) has not been set aside, the following restrictions apply to that data when the function block data on the Loop Control Unit is simply read. Otherwise, these restrictions do not apply to ITEM data.

The function blocks that are read will be connected automatically using the shortest connections possible. If the connections between the original function blocks were more indirect, then the connections between the resulting file blocks may be different. (The actual connection information used in execution, however, will be the same.)

Annotation data is not read.

Output comments in ladder diagrams are not read.

Regardless of the above restrictions, follow the procedure below to replace the Loop Control Unit when the function block data on the Loop Control Unit to be replaced is uploaded and downloaded to the new Loop Control Unit.

1, 2, 3…

1. Turn power OFF to the PC.
2. Establish the connection between CX-Process Tool and the CPU Unit.
3. Turn power ON to the PC.
4. Upload the function block data from the Loop Control Unit.
5. Turn power OFF to the PC.
6. Replace the Loop Control Unit.
7. Turn power ON to the PC.
8. Wire the function blocks in CX-Process Tool as necessary based on the function block file (appended with the .ist extender) that was uploaded from the Loop Control Unit.
9. Download the function block file to the Loop Control Unit.
10. If necessary, use CX-Process Tool to compare all function block files to check whether or not the download has been executed successfully.
11. Save the function block file whose function blocks have been wired in the software on the hard disk or other storage medium.
12. Check the Loop Control Unit again for any malfunction.

7-2-2 Using the flash memory

The flash memory can be used in the following two ways:

- For battery-free operation

- To back up and recover memory if a battery error occurs during normal operation

Note 1 Before turning ON pin 2 on the DIP switch, transfer the function block data to the flash memory using the CX-Process Tool. If the function block data is not stored in flash memory, RAM data will be overwritten and deleted at startup.

Note 2 Do not turn OFF the power supply to the PC when data is being transferred from RAM to flash memory. Data will not be transferred correctly if power is turned OFF before the transfer operation is completed, and a database may occur when the contents of flash memory are transferred to RAM (e.g., during automatic transfer at startup with DIP switch pin 2 turned ON). If this happens, ITEM 094 in the System Common block will be set to FFFF and bit 04 of word n will turn ON. If a database error occurs, download the function block data gain from the CX-Process Tool to RAM in the Loop Control Unit, and then transfer the contents of RAM to flash memory.

Battery-free operation

Although the Loop Control Unit can be run off of RAM backed up with a battery, battery-free operation is also possible when it is impossible or undesirable to perform battery maintenance. For battery-free operation, however, a cold start must be used (i.e., internal arithmetic memory will be initialized at startup).

Use the following procedure for battery-free operation.

1, 2, 3…

1. Transfer the contents of RAM to flash memory from the CX-Process Tool. (Note: Unit operation will stop when transfer is started.)
2. Turn OFF the power supply to the PC.
3. Turn ON pin 2 of the DIP switch.
4. Turn ON the power supply to the PC.

The Loop Control Unit will transfer the contents of flash memory to RAM before executing a cold start.

Every time the Loop Control Unit is started, the contents of flash memory will be transferred to RAM, and then a cold start will be performed. (As long as power to the Unit remains ON, a hot start can also be performed from the CX-Process Tool or Monitor.

RAM backup and recovery for battery errors

If the function block data is stored in flash memory in advance, the contents of RAM can be restored if it is lost as the result of a battery error. Use the following procedure.

1, 2, 3…

1. Transfer the contents of RAM to flash memory from the CX-Process Tool. (Note: Unit operation will stop when transfer is started.)
2. Start operation with pin 2 on the DIP switch turned OFF.

   Either a hot or a cold start can be performed and the function block data in RAM will be used.
3. Continue normal operation, checking for battery errors and replacing the battery as required.
4. If a database error occurs (bit 04 of word n turns ON) indicating that the contents of RAM has been corrupted, perform steps 5 to 11 to restore the contents of RAM and continue operation again.

5. Turn OFF the power supply to the PC.
6. Turn ON pin 2 of the DIP switch.
7. Turn ON the power supply to the PC. The contents of flash memory will be copied to RAM and operation will start.
8. Turn OFF the power supply to the PC.
9. Replace the battery.
10. Turn OFF pin 2 of the DIP switch.
11. Turn ON the power supply to the PC.

7-2-3 How to Replace the Battery

The internal battery backs up the following data on the Loop Control Unit:

- Function block data
- Error log stored data

Note 1 The battery will run flat after 120 hours of continuous operation after the ERC LED starts to blink. When the battery runs flat, the above data backed up on the Loop Control Unit will be lost.

Check the battery connection. If it is connected correctly, follow the procedure below to replace the battery.

Note 2 The battery can be replaced while the Loop Control Unit is powered ON.

However, before you replace the battery while the Loop Control Unit is ON, be sure to touch a grounded metal object to discharge any static electricity from your body.

1, 2, 3… 1. Pull down the battery compartment cover on the front of the Loop Control Unit.

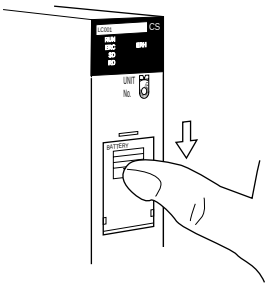

2. Remove the battery compartment cover.

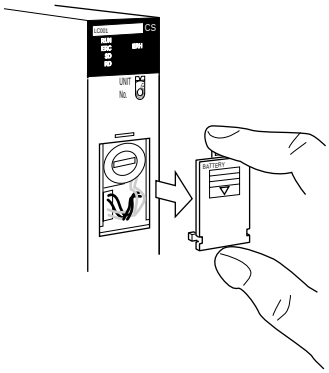

3. Remove the battery together with its connector.

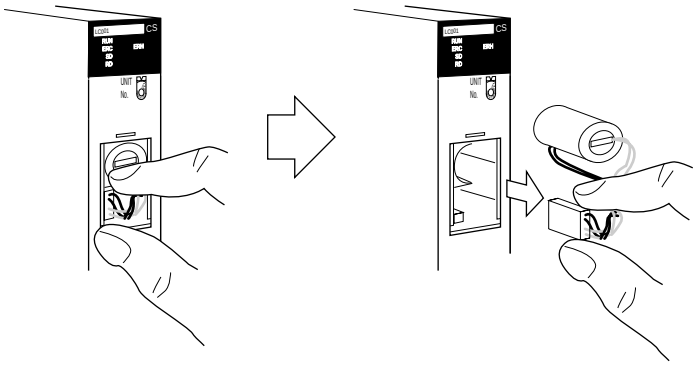

4. Replace the old battery with a new battery within five minutes.

   When removing the battery from the battery holder, take care not to catch the connector cable on the battery holder.

5. Insert the new battery following steps 1 to 4 in reverse order.
6. Attach the battery compartment cover.

Note 3 When a database error (ITEM094 of System Common block is set to FFFF) has occurred (when the nth word bit 04 of the allocated relay area turns ON), RAM must be initialized using CX-Process Tool after the battery is replaced. If RAM is not initialized, all function blocks other than the System Common block (Block Model 000) cannot be accessed (read or written) by CX-Process Tool, CX-Process Monitor or FINS commands.

Replacement battery

Name: Battery set

Block Model: C200H-BAT09

Battery life and replacement cycle

Battery life:

The maximum life of the battery is five years at an ambient temperature of 25°C regardless of how long the Loop Control Unit is powered ON or OFF. Note that high ambient temperatures shorten the life of the battery.

Replacement cycle:

The ERC LED on the front panel of the Loop Control Unit starts to blink when the internal battery voltage drops or the battery is not connected. Replace the Loop Control Unit within five days of the ERC LED (red) starting to blink. When the ERC LED starts to blink (red), ITEM095 of the System Common block (Block Model 000) turns ON, and error log code 0330 is stored on the Loop Control Unit.

Note 4 We recommend keeping a spare Loop Control Unit or battery available so that repairs can be performed as quickly as possible in the event that a malfunction occurs.

Appendix 1
How to Use the Step Ladder Program Block

The Step Ladder Program block (Block Model 301) is used in the following cases:

- When logical operations such as AND, OR and NOT are to be performed on the Loop Control Unit
- When input of changes in the contact state (OFF to ON or ON to OFF) are to be converted to one-shot contact outputs that are ON for only one operation cycle
- When system contacts such as constantly ON contacts are to be used on the Loop Control Unit
- When step progression control, for example, is to be performed on the Loop Control Unit

Note When contact signals are simply to be connected between function blocks, the Contact Distributor block (Block Model 201) is used.

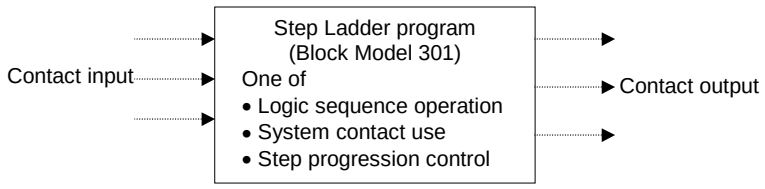

To be more precise, the Step Ladder Program block is used in the following applications:

- For setting the conditions for indicating Remote/Local switching
- For setting the conditions for indicating Auto/Manual switching
- For setting the tracking switch conditions
- For setting the MV hold conditions
- For setting the PID switching conditions
- For setting command switch conditions (e.g. tracking switch, run/stop command to ITEM Setting blocks)
- For step progression control of devices

Example

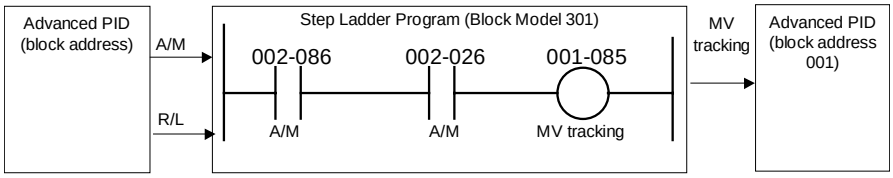

When PID of block address 002 is set to AUTO and the mode is the remote mode, MV tracking of the PID of block address 001 is ON.

Note 1

- The execution cycle of sequence commands in the Step Ladder Program block is slower than the execution cycle (cycle time) of commands on the CPU Unit. (0.1 to 2 s cycles follow the operation cycle of the Step Ladder Program itself.) For this reason, the Step Ladder Program block is used combined with other function blocks. When high-speed processing is required, use commands on the CPU Unit.
- At the Step Ladder Program block, external contacts are not directly input and output. They are input and output via Field Terminal DI or DO terminals.

⚠WARNING When the OUT instruction from the Step Ladder Program is to be connected to a DO terminal, do not set the address for the OUT instruction from the Step Ladder Program to the same address as the address for the OUT instruction in the user's program on the CPU Unit. When writing is performed on identical addresses, the externally connected load may act unexpectedly and cause injury.

- A single sequence command (e.g. LOAD or OUT) is described to a single ITEM, and the block address and ITEM number of the specified input/output destination are described at the same time as the operand.
- Sequence commands are described as a command code within the range 00 to 30. There are two types of sequence command, basic instructions, and sequence control instructions. Basic instructions can be used only in logical sequences comprising single steps, and sequence control instructions can be used in step sequences comprising multiple steps.
- ITEMs that can be specified by sequence commands are ITEMs whose ITEM category is "contact input" or "contact output." For details, see the Setting Method item in the ITEM lists in the descriptions for each function block.

Command type	Settable ITEM type	"According to Step Ladder Program" at "Settable Method" Item
Input type commands such as LOAD	Contact output	R (read-enabled)
	Contact input	R/W (read/write-enabled)
Output type commands such as OUT	Contact input	

List of Basic Instructions

	Command	Command code	Ladder symbol	Operand	Description	Input conditions	○: Can be used ×: Cannot be used	
							In logic sequence	In step sequence
Input type	LOAD	01		Read source block address/ ITEM number	Indicates a logical start of the logic block, creates an ON/OFF execution condition based on the ON/OFF status of the contact, and connects to the next stage.	Not required	○	○
	LOAD NOT	02		Read source block address/ ITEM number	Indicates a logical start of the logic block, creates an ON/OFF execution condition based on the reverse of the ON/OFF status of the contact, and connects to the next stage.	Not required	○	○
	AND	03		Read source block address/ ITEM number	Takes a logical AND of the status of the contact and the current execution condition.	Required	○	○
	AND NOT	04		Read source block address/ ITEM number	Reverses the status of the contact and takes a logical AND with the current execution condition.	Required	○	○
	OR	05		Read source block address/ ITEM number	Takes a logical OR of the status of the contact and the current execution condition.	Required	○	○
	OR NOT	06		Read source block address/ ITEM number	Reverses the status of the contact and takes a logical OR with the current execution condition.	Required	○	○
	AND LOAD	07	Circuit block Circuit block	000000 (fixed)	Takes a logical AND between circuit blocks.	Required (2 or more)	○	○
	OR LOAD	08	Circuit block Circuit block	000000 (fixed)	Takes a logical OR between circuit blocks.	Required (2 or more)	○	○

	Command	Command code	Ladder symbol	Operand	Description	Input conditions	○: Can be used ×: Cannot be used	
							In logic sequence	In step sequence
Output type	OUT	11	—○—	Write destination block address/ ITEM number	Outputs the result (execution condition) of logical processing: 0 (OFF) at condition 0 (OFF), and 1 (ON) at condition 1 (ON).	Required	○	○
	OUT NOT	12	—⊘—	Write destination block address/ ITEM number	Outputs the result (execution condition) of logical processing: 1 (ON) at condition 0 (OFF), and 0 (OFF) at condition 1 (ON).	Required	○	○
	SET	13	—(S)—	Write destination block address/ ITEM number	SET turns the operand bit 1 (ON) when the execution condition is 1 (ON), and does not affect the status of the operand bit when the execution condition is 0 (OFF). Use RESET to turn OFF a bit that has been turned ON with SET.	Required	○	○
	RESET	14	—(R)—	Write destination block address/ ITEM number	RESET turns the operand bit 0 (OFF) when the execution condition is 1 (ON), and does not affect the status of the operand bit when the execution condition is 0 (OFF). Use SET to turn OFF a bit that has been turned ON with RESET.	Required	○	○
	DIFU	15	—(DU)—	Write destination block address/ ITEM number	Outputs 1 (ON) for one operation cycle only when the execution condition goes to 1 (ON) from 0 (OFF).	Required	○	○
	DIFD	16	—(DD)—	Write destination block address/ ITEM number	Outputs 1 (ON) for one operation cycle only when the execution condition goes to 0 (OFF) from 1 (ON).	Required	○	○

	Command	Command code	Ladder symbol	Operand	Description	Input conditions	○: Can be used –×: Cannot be used	
							In logic sequence	In step sequence
—	Draw line				Connects vertical or horizontal lines.	—	○	○
—	Delete line				Deletes vertical or horizontal lines.	—	○	○
—	END	00	ED		Indicates the end of a program. Note: The END instruction is automatically placed at the end of program when the Step Ladder Program block is prepared using CX-Process Tool. It is placed after STEP00 when the program comprises STEP00 only, and is placed after the nth STEP where the program ends.	Not required	○	○
—	NO OPERATION	30	NP		This instruction has no function. (No processing is performed for NOP.)	Not required	○	○

Note 1 The ON signal for one operation cycle that is generated by the differentiate up (DIFU) or differentiate down (DIFD) command automatically turns OFF at the start of the Step Ladder Program block of the next operation cycle. (This signal does not turn OFF by the DIFU or DIFD command in the Step Ladder Program.)

Note 2

- When the ON signal for one operation cycle that is generated by the DIFU or DIFD command is used by another function block, set the operation cycle to the same or higher than the operation cycle of the Step Ladder Program. The ON signal sometimes cannot be read normally when an operation cycle that is lower than the operation cycle of the Step Ladder Program is set.
- A contact ITEM that has been turned ON by the OUT command stays ON even if program execution moves to the next STEP. For this reason, to perform step progression control in a step sequence, use the RESET command at the next STEP to turn OFF the contact ITEM that has been turned ON.

List of Sequence Control Instructions

Command	Command code	Ladder symbol	Operand	Description	Input conditions	○: Can be used –×: Cannot be used	
						In logic sequence	In step sequence
STEP	21	Step number STEP	Step number	STEP declares the step number, and has no input conditions (is a direction connection to the bus). Any numbers in the range 00 to 99 are used as the step number, and are placed in ascending order. 1) Logic sequence: The step number is fixed at 00, and is functional at all times. Declaration of step number 00 can be omitted. 2) Step sequence: When the step number is within the range 01 to 99, only one of the steps is functional. When the program is started, step number 01 is functional.	Not required	○	○
BLOCK SET	22	(BS)	Block address/ step number	When the input conditions turn ON, operation of the specified step number of the Step Ladder Program block at the specified block address (400 to 499) is started. Run/stop command S1 of the specified block turns automatically 1 (ON). Operation of currently executing steps in already operating Step Ladder Program blocks is interrupted, and execution of the program jumps to the specified step.	Required	–	○
BLOCK RSET	23	(BR)	Block address	When the input conditions turn ON, operation of the Step Ladder Program block is stopped at the specified block address (400 to 499). Run/stop command S1 of the specified block automatically turns 0 (OFF).	Required	×–	○

Command	Command code	Ladder symbol	Operand	Description	Input conditions	○: Can be used –×: Cannot be used	
						In logic sequence	In step sequence
JUMP	25	— JUMP —┤	Block address/ step number	When the input conditions turn ON, execution of the program jumps to the specified step number (01 to 99) of the Step Ladder Program block at the specified block address (400 to 499). • To specify a jump to the self step number, set the block address to 000. • When a jump is made to another Step Ladder Program block, run/stop command S1 of the source block automatically turns 0 (OFF), and run/stop command S1 of the destination block turns 1 (ON).	Required	×–×	○
STEP TIMER	27	— STEP TIMER —	Timer setting value	This is the timer (setting range: 0 to 9999 sec) for moving between steps. It has no input conditions. (STEP TIMER is placed in the same line as the STEP command.) Operation is started when program execution moves to the line containing the STEP command. When the time set by STEP TIMER is reached, the program execution moves to the next step. Note: "Input condition commands" are given top priority.	Not required	×–×	○
ALARM TIMER	28	— ALM TIMER —	Timer setting value	This is the timer (setting range: 0 to 9999 sec) for monitoring steps. It has no input conditions. (ALARM TIMER is placed in the same line as the STEP command.) Operation is started when program execution moves to the line containing the STEP command. When the time set by ALARM TIMER is reached, the Step Timer Completion flag (step congestion indicator) turns 1 (ON). At this time, the step is held at the current values.	Not required	×–×	○

- To receive data internally by the Step Ladder Program without outputting it to the block address and ITEM number, specify the Internal Switch block (Block Model 209) as the block address.

Example

ITEM	Command	Command code	Operand
011	LOAD	01	001013 (block address, ITEM number)
012	OUT	07	100011 (block address of internal switch, ITEM number)
013	LOAD	01	100011 (block address of internal switch, ITEM number)
014	OUT	07	001012 (block address, ITEM number)

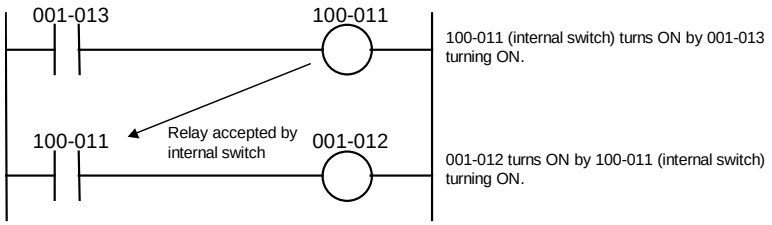

- To input constantly ON or constantly OFF contacts or clock pulse contacts, specify state outputs for sequence control (ITEM020 to ITEM028) in the System Common block (Block Model 000) as the block address.

Example

Command	Command code	Operand
LOAD	01	000021 (constantly ON)
OUT	07	001086 (block address, ITEM number)
LOAD	01	000023 (1sec clock)
OUT	07	(block address, ITEM number)

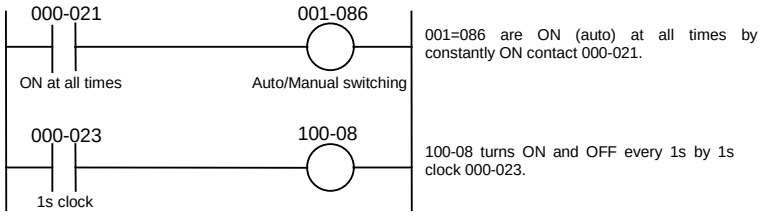

Operating conditions for the Step Ladder Program block

The operating conditions for the Step Ladder Program block vary according to the startup mode of ITEM006. You can specify one of the following:

- Operation at all times
- When S1 turns ON

Note The Step Ladder Program can be started up from other Step Ladder Program blocks by BLOCK SET.

When a single step is used as a logic sequence

The default step is STEP000. STEP000 operates at all times when the operating conditions are satisfied. This step operates when run/stop command S1 (ITEM008) of the Step Ladder Program block turns ON.

Single step (normal)

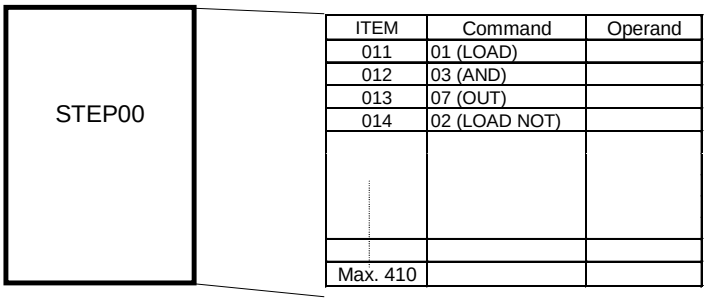

ITEM	Command	Operand
011	01 (LOAD)	
012	03 (AND)	
013	07 (OUT)	
014	02 (LOAD NOT)	
Max. 410		

When multiple steps are used as a step sequence

Step Ladder Program blocks can be broken up into 99 steps STEP01 to 99. Whereas STEP00 operates at all times when the operating conditions are satisfied, one of steps STEP01 to STEP99 operates when the operating conditions are satisfied

- A Step Ladder Program comprising STEP01 to STEP99 is called a "step sequence." Sequence control instructions (command codes 21 to 28) such as JUMP (jump to a specified step) can be used in step sequences.
- Movement between steps STEP01 to STEP99 is performed according to the following conditions:

1) Move to next STEP when the input conditions of the final sequence command in the previous STEP are satisfied ∗1
2) Jump to a specified step according to the JUMP command
3) Move to the next STEP (STEP+1) when the time set by the STEP TIMER command has elapsed

   Movement between steps when input conditions are satisfied in this way allows step progression control to be performed.

   ∗1: Basically, movement between STEPs is movement to the next STEP when the input conditions of the last sequence command are ON.

Example

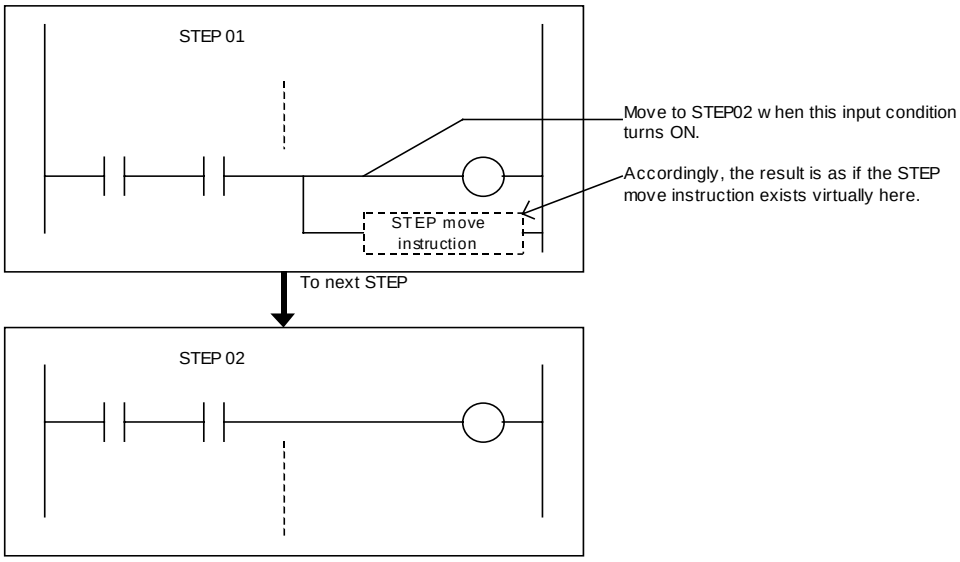

- To break up a Step Ladder Program, use the STEP command (21). (The default step for the Step Ladder Program block is the constant operation step STEP00.)
- When run/stop command S1 (ITEM008) of the Step Ladder Program block turns ON, STEP00 (constantly available step) and STEP01 (first step of step sequence) operate. Program execution is made to move to other steps (also to specified STEPs in other Step Ladder Program blocks) when the input conditions are satisfied during STEP01.

  STEP01 onwards only can also be described without describing STEP00 (constantly available step).
- When contact input to stop move to next step switch S2 (ITEM009) in the entire Step Ladder Program block turns ON, program execution pauses at the currently operating STEP. Output is also held at the current state at this time. When contact input to S2 (ITEM009) returns to OFF, program execution is resumed from the STEP that was paused.

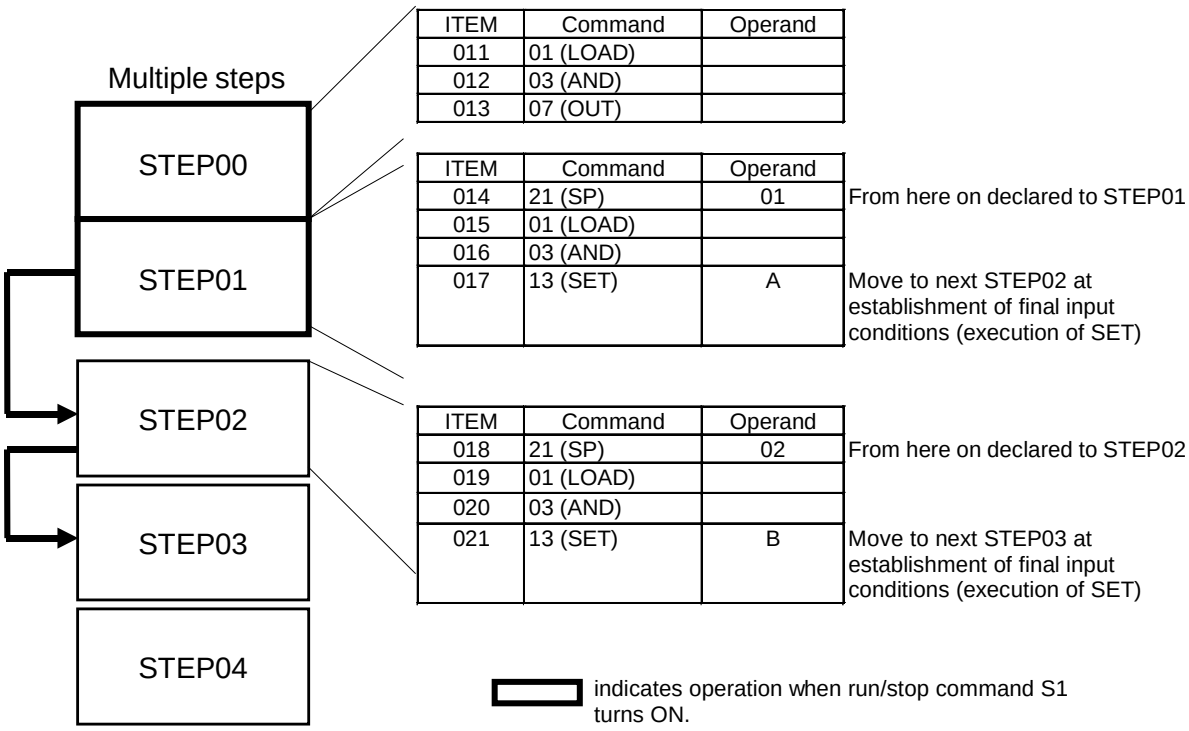

How to program for step progression control

To execute specific processing in each process, program the step sequence as follows:

1) Execute the SET command at the end of STEP n as the input condition for moving to another step, and set the internal switch. Program execution moves to next STEP n+1.
2) Execute the specific process at the start of next STEP n+1 taking the internal switch as the input conditions. Reset the internal switch after completion of the specific process.

Example The following shows an example where the PID value is switched at each process to simultaneously stop and start pump operation.

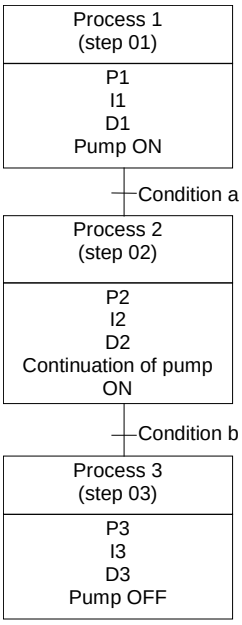

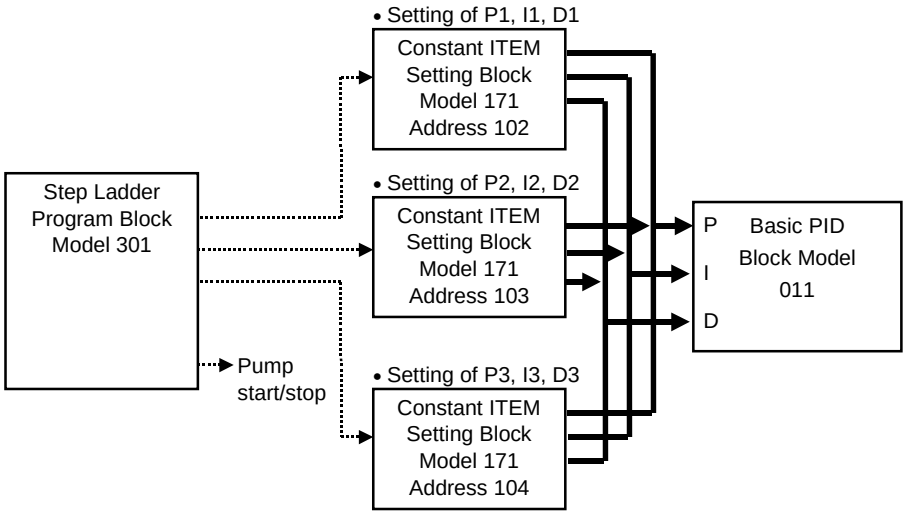

Example of Step Ladder Program

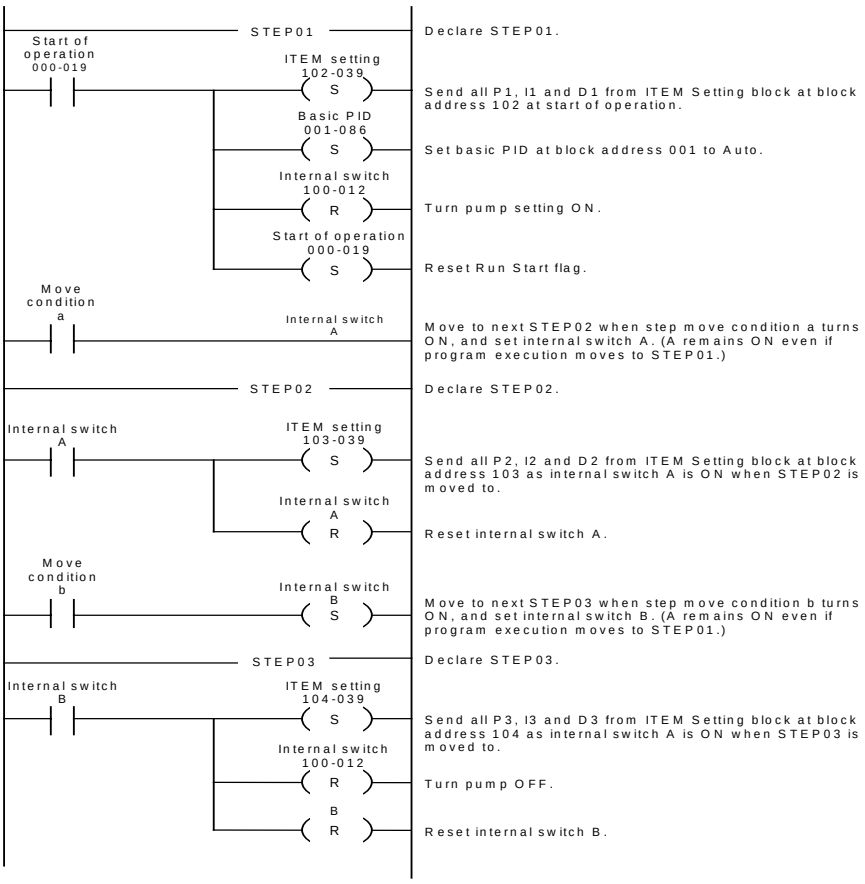

Note A contact ITEM that has been turned ON by the OUT command stays ON even if program execution moves to the next STEP. For this reason, care must be taken when using the OUT command when performing step progression control. To turn OFF the contact ITEM, that has been turned ON by the OUT command, by movement between STEPs, use the RESET command to reset the contact ITEM.

Appendix 2
How to Use the Node Terminal Block

Application of the Node Terminal Block

The Node Terminal Block is used in the following cases:

1, 2, 3…

1. To use CX-Process Monitor or to read data for monitoring the Loop Control Unit from the host computer
2. To write data to the Loop Control Unit from the host computer
3. To send and receive data between node terminals with a Loop Control Unit at another node PC on the Controller Link network

How to Use the Node Terminal Block

1, 2, 3…

1. To use CX-Process Monitor (or read data for monitoring the Loop Control Unit from the host computer)

The Loop Control Unit uses the following Send to Computer function blocks to send data to the Area to send to computer (data area for monitor) in Data Memory (on CPU Unit) for Node Terminals.

Function blocks used: DO to Computer (Block Model 401)

AO to Computer (Block Model 402)

1-Block Send Terminal to Computer (Block Model 403)

4-Block Send Terminal to Computer (Block Model 404)

The host computer (including CX-Process Monitor) reads data from the Area to send to computer.

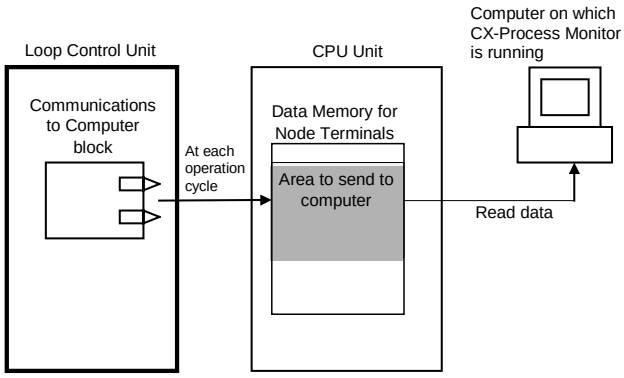

There are two modes of exchanging data between the host computer and Loop Control Unit.

Method	On-demand reading mode	Data link mode
Description	Host computer on which CX-Process Monitor is running reads the Area to send to computer whenever required.	Host computer on which CX-Process Monitor is running uses the Data Link to read the Area to send to computer at all times.
Connection method	Host Link, Ethernet, Controller Link, etc. 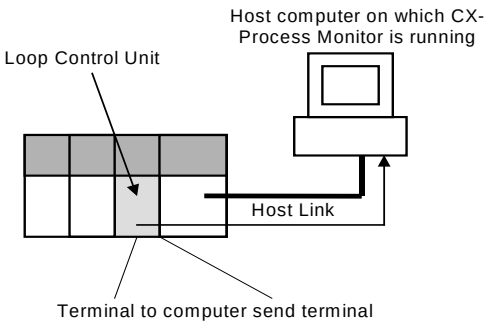	Controller Link data link used.

Basic procedure

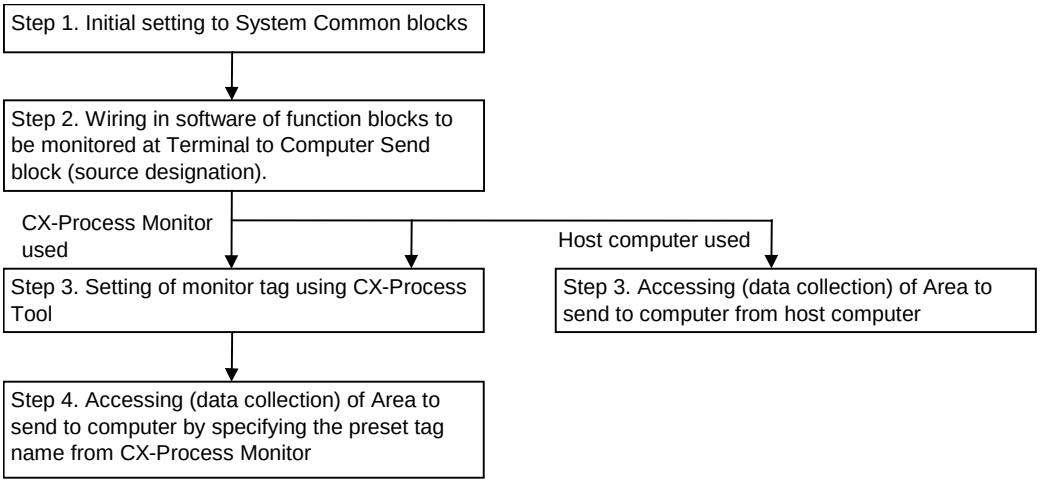

2. To write data to the Loop Control Unit from the host computer

The host computer writes data on the following Terminal Setting from Computer blocks on the Loop Control Unit using the FINS WRITE ITEM commands issued to the Loop Control Unit.

Function blocks used: DO Terminal Settings from Computer (Block Model 409)

AO Terminal Settings from Computer (Block Model 410)

The Loop Control Unit can use the Terminal Setting from Computer blocks to use the contact or analog data that is written from the computer.

Note The Loop Control Unit can also re-issue the data written from the computer to the Controller Link network. When data is re-issued, the Loop Control Unit internally writes the data to the Area to send to all nodes in Data Memory (on CPU Unit) for the Node Terminals, and sends the data to the Loop Control Unit at another node PC by the Controller Link Data Link.

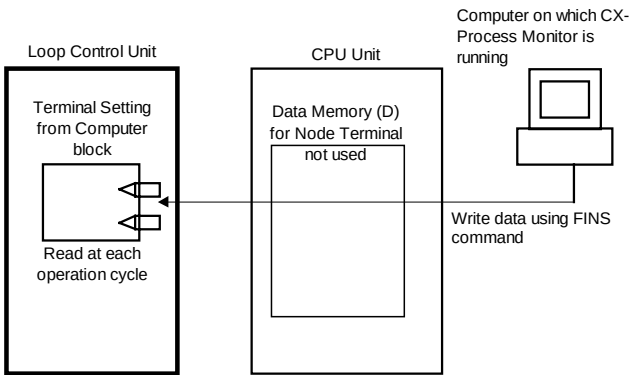

At this time, the computer and Loop Control Unit can be connected via either the host link or the network as long as FINS commands can be issued to the Loop Control Unit from the computer.

Basic procedure

Step 1. Wiring in software (source designation) of Terminal Setting from Computer block to function block to be written

↓

Step 2. Issue of FINS command (write command to Terminal Setting from Computer block) to Loop Control Unit from host computer

3. To send and receive data between node terminals and the Loop Control Unit at another node PC on the Controller Link network

The Loop Control Unit uses the following Send Terminal to All Nodes or Receive Terminal from All Nodes blocks to send data to the Area to send to all nodes of the Data Memory (on CPU Unit) for the Node Terminals or to receive data from Area to receive from all nodes.

Note, however, that a Data Link (user setting) must already be established by the Controller Link between PCs on which the Loop Control Unit is mounted.

- During data transmission: DO Terminal to All Nodes (Block Model 407)

  AO Terminal to All Nodes (Block Model 408)

  The other node PC receives the data by the Controller Link Data Link. The Loop Control Unit at the other node PC uses DI Terminal from All Nodes (Block Model 414) and AI Terminal from All Nodes (Block Model 415) to read data from the Area to receive from all nodes (on CPU Unit).

- During data reception: DI Terminal from All Nodes (Block Model 414)

  AI Terminal from All Nodes (Block Model 415)

  The self node PC receives the data that was sent from the Loop Control Unit at the other node PC by the Controller Link Data Link. The Loop Control Unit on the self node PC uses DI Terminal from All Nodes (Block Model 414) and AI Terminal from All Nodes (Block Model 415) to read data from the Area to receive from all nodes (on CPU Unit).

  The Loop Control Units at this time can be connected only by the Controller Link. Moreover, user settings for the Data Link must be set for the Loop Control Units.

  For details, see *How to Set Controller Link Data Link Tables* described later in this Appendix.

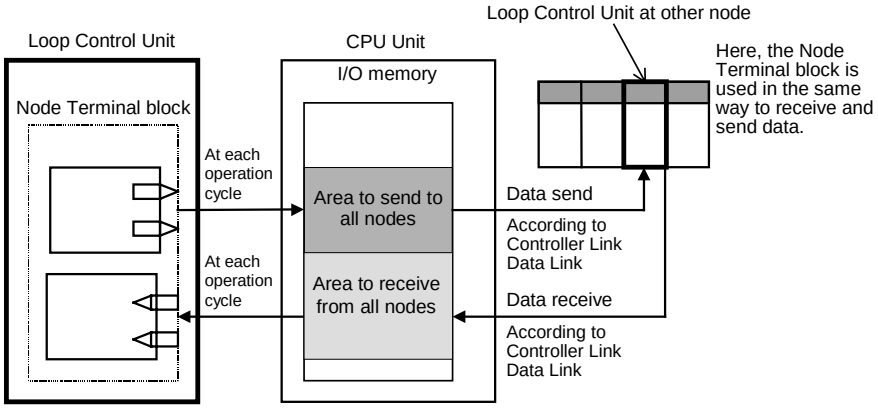

- Controller Link connection

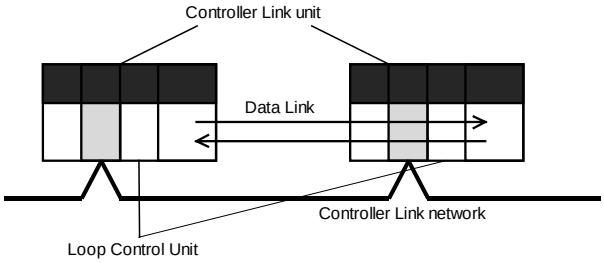

Basic Procedure

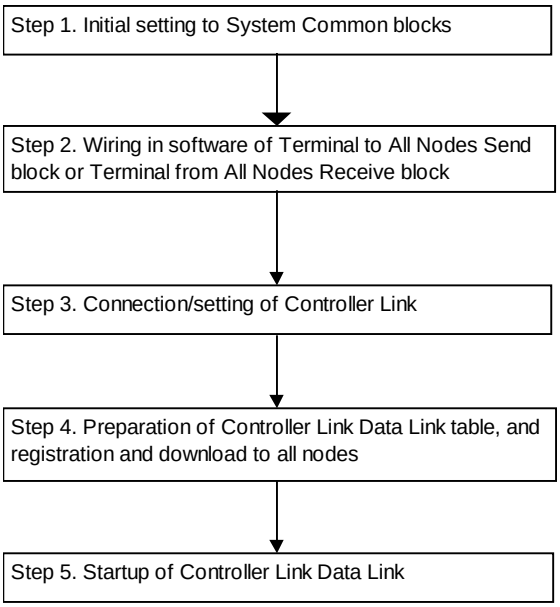

Note The Loop Control Unit can also use this function to exchange data with a CPU Unit at another node via the Data Link even if a Loop Control Unit is not mounted at another node PC on the Controller Link network.

Initial Setting of the System Common Block

To use the node terminals (excluding the DO and AO Terminal Settings from Computer blocks [Block Models 409 and 410]), CX-Process Tool must be used to set the leading addresses of the Data Memory (on CPU Unit) for the node terminals to ITEM042 and ITEM043 of the System Common block.

Note When only the DI and AI Terminal Setting from Computer blocks are used as the node terminals and the data received from the computer is stored to the Area to send to all nodes and is not then sent to a networked Loop Control Unit, operation is possible without the need to perform initial setting of the System Common block as shown in the table below.

System Common block (Block Model 000)

ITEM	Data name	Data range	Default
043	Leading address (S) of Data Memory for the Node Terminals (on CPU Unit)	0 to 32767	16020
042	Setting of LCU number: ID data of multiple (max. 3) Loop Control Units mounted on CPU Rack	0 to 2	0

When the above ITEMs are set, the system information of the Loop Control Unit is automatically reflected in eight words within leading address S to leading address S+23 words of the Data Memory (on CPU Unit) for the Node Terminals.

Configuration of Data Memory for the Node Terminals

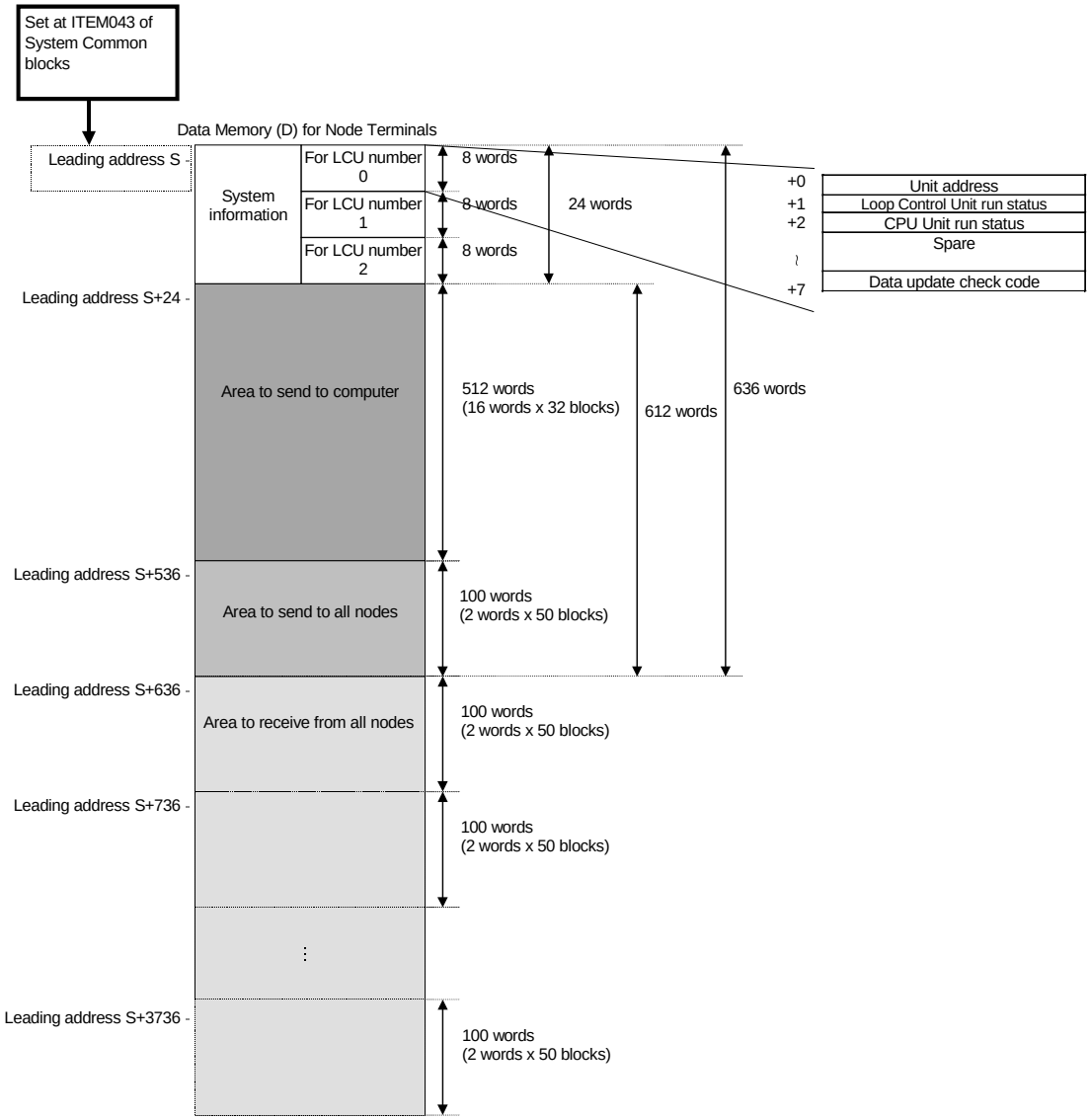

Relationship between Data Memory (on CPU Unit) for Node Terminals and Node Terminal Block

Data Memory (on CPU Unit) for the Node Terminals corresponds to the Node Terminal blocks shown in the table below.

Data Memory for Node Terminal area (on CPU Unit)	Corresponding node terminal	Per 1 block	Number of blocks	Total number of words
Area to send to computer	1-Block Send Terminal to Computer, 4-Block Send Terminal to Computer, AO/DO to Computer	16 words	32 blocks	512 words
Area to send to all nodes	AO/DO Terminals to All Nodes	2 words	50 blocks	100 words
Area to receive from all nodes	AI/DI Terminals from All Nodes	2 words	50 blocks	100 words x number of nodes (max. 32 nodes: 3200 words)

Example of Data Memory for node terminals

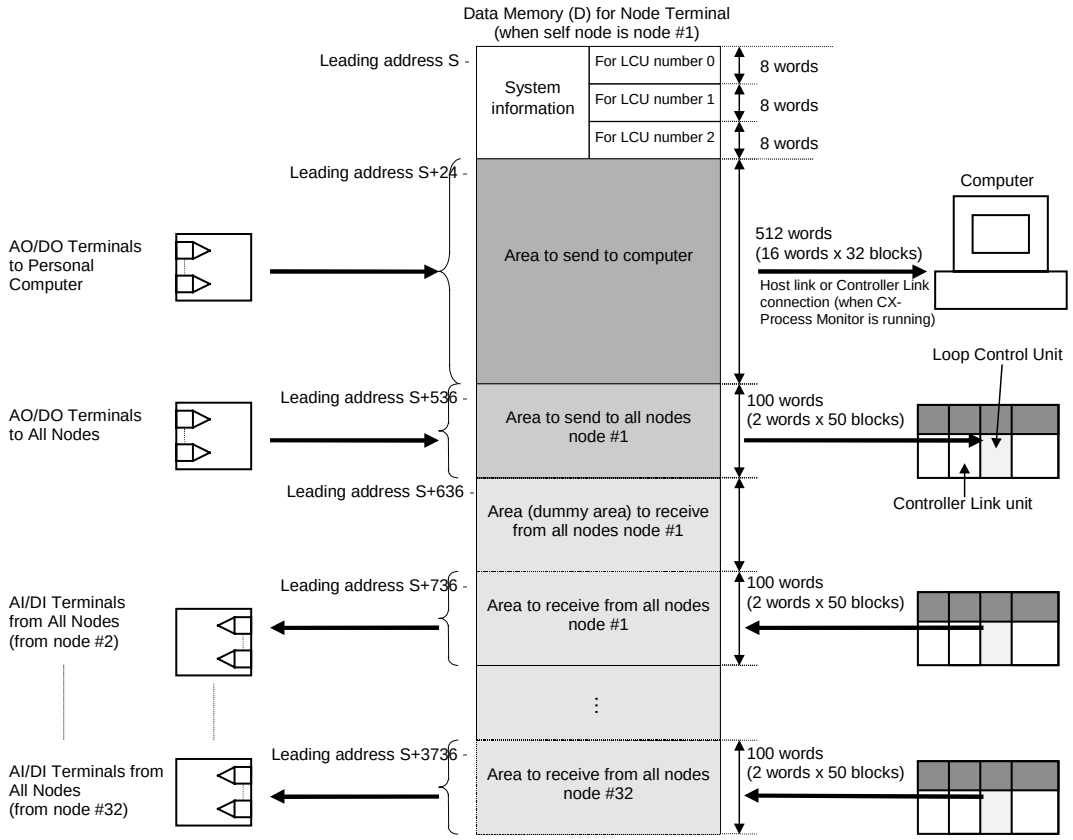

How to Set Controller Link Data Link Tables

When the Node Terminal block is used to send and receive data to and from the personal computer on the Controller Link or a Loop Control Unit at another PC, the Controller Link Data Link (user setting) table (Note) shown below must be prepared and registered (downloaded) on each node.

Note A "Data Link table" specifies which area on the self node is to be sent and how many words are to be received from which area on other nodes.

There are two modes of connection, connection modes 1 and 2. The connection mode is determined by whether the connection is with only the computer on which CX-Process Monitor is running, or the connection is also with the Loop Control Unit at another node PC.

Connection mode 1: Connection with only the computer on which CX-Process Monitor is running

Connection mode 2: Connection with the Loop Control Unit at another node PC and the computer on which CX-Process Monitor is running

Connection mode 1) Connection with only the computer on which CX-Process Monitor is running

Data Link table settings

Item	Description
Type of data link	Any setting
Link start word	Same as leading address (S) of Data Memory (on CPU Unit) for the Node Terminals
Self node leading send word	Same as leading address (S) of Data Memory (on CPU Unit) for the Node Terminals
Number of self node send words	536 words

Description of above settings

Area	Send/ Receive	Number of words	Description
24 words of system information	Send	536 words	Send to computer on which CX-Process Monitor is running
512 words of Area to send to computer			Send to computer on which CX-Process Monitor is running

The following shows an example of how to set the Data Link table.

Example of connection mode 1) Using Controller Link to connect to CX-Process Monitor

System information (24 words) and Area to send to computer (512 words) are sent over the Data Link.

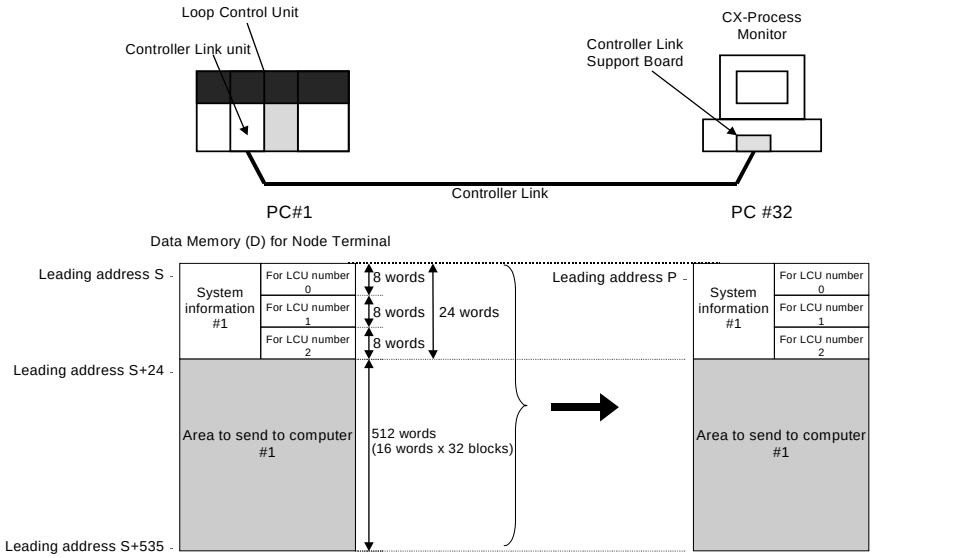

Node: 01, Link start word: S				
Node	Send/ Receive	Leading word of self node	Number of words	Offset
01	Send	S	536 words	—
02	Receive OFF	—	—	—

Node: 02, Link start word: 20				
Node	Send/ Receive	Leading word of self node	Number of words	Offset
01	Receive	20	536 words	0 word
02	Send OFF	—	—	

Note: Status information of the Controller Link Data Link is allocated to words 0 to 19.

The Loop Control Unit uses the 1-Block Send Terminal to Computer or 4-Block Send Terminal to Computer to send Control blocks such as PID blocks that are to be monitored on CX-Process Monitor to the Area to send to computer.

It also uses the DO to Computer or AO to Computer block to send contacts (including parameters) or analog signals (including parameters) to this Area to send to computer.

By the user settings of the Controller Link Data Link, a total of 536 words comprising system information (24 words) and Area to send to computer (512 words) are sent to the computer.

In this way, the following Send to Computer blocks in the Loop Control Unit are sent (allocated) to the 512 words of the Area to send to computer in Data Memory area for node terminals in order of block address (501 onwards through to 532) one function block at a time at a fixed rate of 16 words per function block. (512 words is calculated by (max.) 32 function blocks x 16 words.)

Note A fixed number of words (512) is used even if 32 function blocks are not used.

1-Block Send Terminal to Computer (Block Model 403)

4-Block Send Terminal to Computer (Block Model 404)

DO to Computer (Block Model 401)

AO to Computer (Block Model 402)

The Control block or contact/analog signals can be monitored on CX-Process Monitor based on that data.

Actual example

The following shows a simple example.

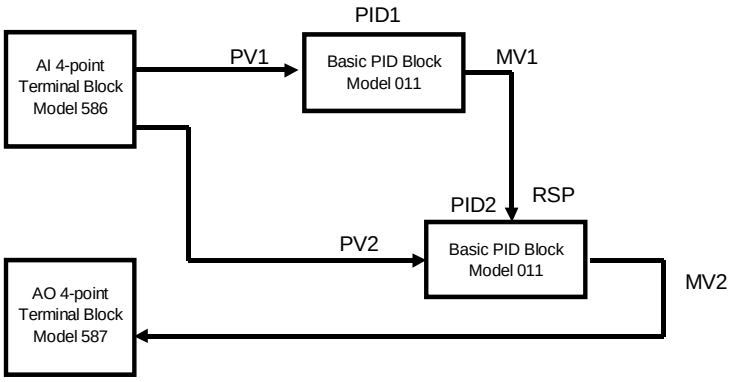

In the above example, basic PID is specified as follows on the 1-Block Send Terminal to Computer (Block Model 403) as the source designation function block address.

Block address	ITEM No.	Data	Explanation
501	002	403	1-Block Send Terminal to Computer
	011	001	PID1 of block address 001 is sent to CX-Process Monitor running on the computer.
502	002	403	1-Block Send Terminal to Computer
	011	002	PID2 of block address 002 is sent to CX-Process Monitor running on the computer.
001	002	011	Basic PID (PID1)
002	002	011	Basic PID (PID2)

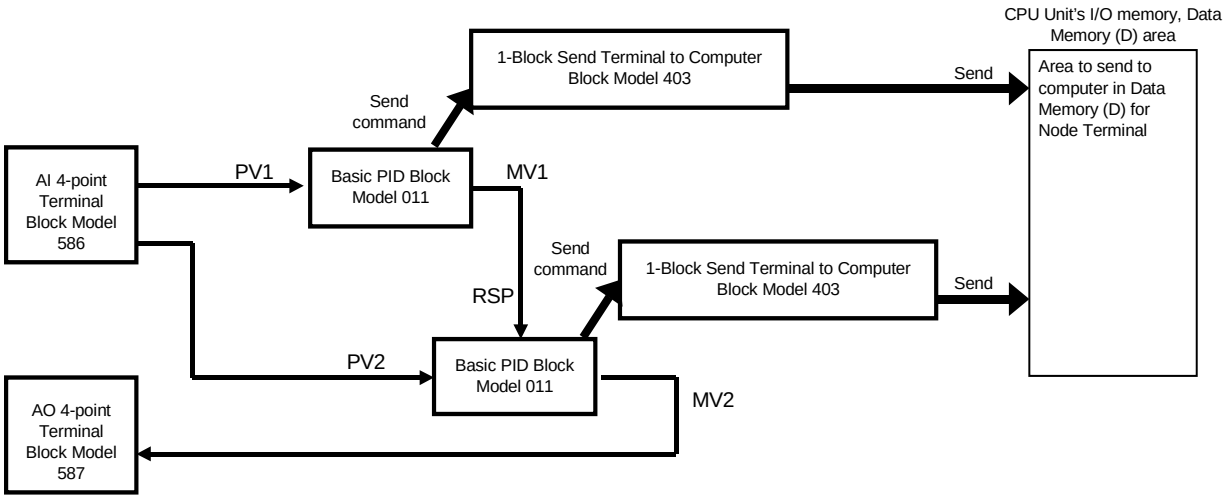

Block addresses 501 and 502 are each sent (allocated) to the Area to send to computer of the Data Memory area for the node terminals.

When the leading address (S) of the Data Memory area for the Node Terminals is taken to be D16020 (set to ITEM043):

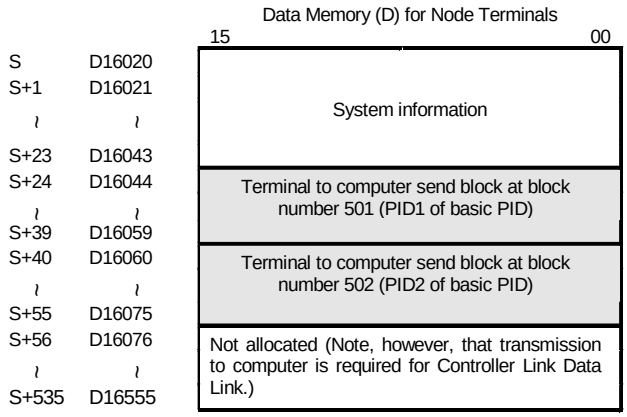

In this example, let's assume that the PC is node 01 and that the computer on which CX-Process Monitor is running is node 02.

Each of the data link tables is set as follows:

Node: 01, Link start word: D16020				
Node	Send/ Receive	Leading word of self node	Number of words	Offset
01	Send	D16020	536 words	—
02	Reception OFF	—	—	—

Node: 02, Link start word: P				
Node	Send/ Receive	Leading word of self node	Number of words	Offset
01	Receive	P	536 words	0 word
02	Send OFF	—	—	

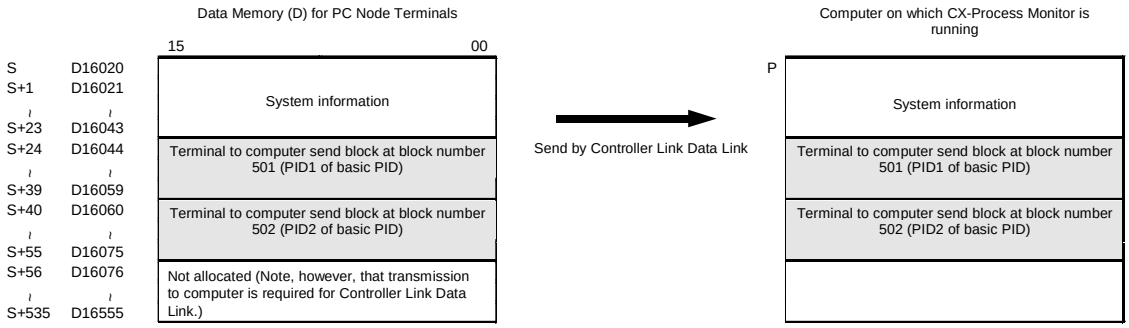

Connection mode 2) Connecting with the Loop Control Unit at another node PC and the computer on which CX-Process Monitor is running

Data link table settings

Item	Description
Data link type	Any setting
Link start word	Leading address (S) of Data Memory for the node terminals (on CPU Unit)
Self node leading send word	Leading address (S) of Data Memory for the node terminals (on CPU Unit)
Number of self node send words	636 words
Number of receive offsets from other node (PC)	100 words x (number of PC nodes) Note: Of these words, the 100 words of the Area to receive from all nodes at the self node address are dummy words and cannot be used.
Receive offset from other node (PC)	Self node + 1 is 436 words. Otherwise 536 words Note: The reason for setting the receive offset to 436 words and not 536 words is to allow reception of the 100 dummy words.
Placement order of send area and receive area	Send area → receive area Node address of receive area: Small number (#1) to large number (max. #32)

Description of above settings

Area		Send/ Receive	Number of words	Description
System information (24 words)		Send	636	Sent to computer on which CX-Process Monitor is running
Area to send to computer (512 words)				Sent to computer on which CX-Process Monitor is running
	Uppermost 100 words			The node (self node +1) receives these 100 dummy words at the Area to receive from all nodes of the self node address.
Area to send to all nodes (100 words)				Other nodes receive these 100 words.
Area to receive from all nodes Ascending order from #1 in order of node address		Receive	100 words x number of receive nodes	100 words each are received from the Area to send to all nodes of each node address. Note: As self data cannot be received at the Area to receive from all nodes of the self node address, the uppermost 100 words of the Area to send to computer of the node (self node -1) are received as dummy words.

Note 1 In a Controller Link Data Link (user setting), the send and receive areas can be placed regardless of the node address order. However, when the Node Terminal block of this Loop Control Unit is to be used, place the send areas at the leading position and then place the receive areas in order of node address.

Self send data, however, cannot be received over the Controller Link. For this reason, receive the uppermost 100 words of the Area to send to computer of the node (self node +1) as dummy words at the receive area corresponding to the self node address as described above so that the data of all node addresses including the self are placed in the Area to receive from all nodes in node address order. Note that the data of other nodes cannot be received correctly when the receive area is not to be placed in node address order.

Note 2 In addition to connection mode 2) above, the CPU Unit Terminal block or Expanded CPU Unit Terminal block can be used to read and write the Data Link area after building a regular Controller Link Data Link as a method of connecting the Loop Control Unit to another node PC.

However, the Data Link in connection mode 1) above is required for monitoring the Loop Control Unit on CX-Process Monitor.

Example of Connection mode 2) Two PCs and one computer are connected by Controller Link Data Link

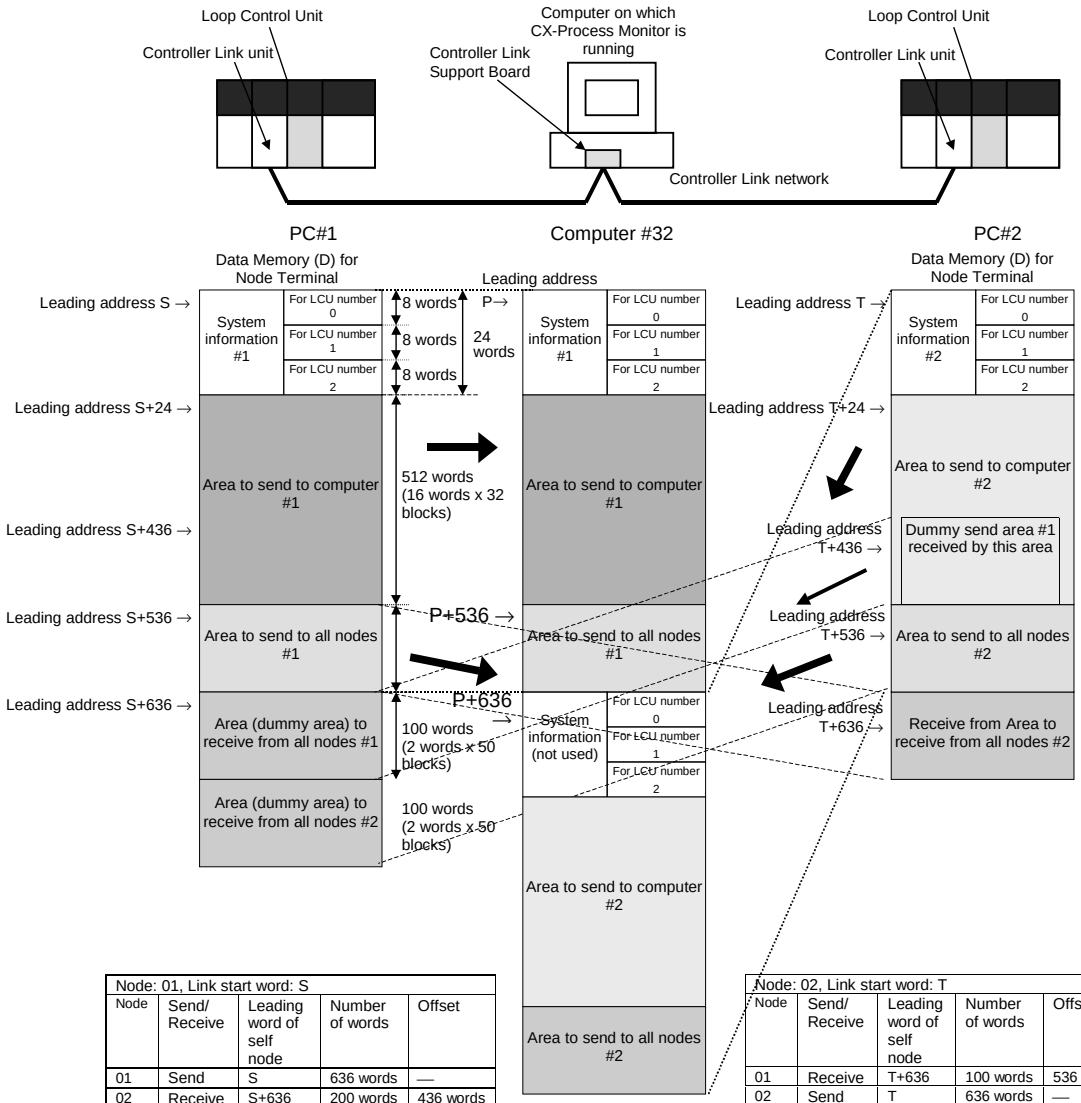

Node: 01, Link start word: S				
Node	Send/ Receive	Leading word of self node	Number of words	Offset
01	Send	S	636 words	—
02	Receive	S+636	200 words	436 words
32	Receive OFF	—	—	—

Node: 02, Link start word: T				
Node	Send/ Receive	Leading word of self node	Number of words	Offset
01	Receive	T+636	100 words	536 words
02	Send	T	636 words	—
32	Receive OFF	—	—	—

Node: 32, Link start word: P				
Node	Send/ Receive	Leading word of self node	Number of words	Offset
01	Receive	P	636 words	0 word
32	Send OFF	—	—	
02	Receive	P+636 words	636 words	0 word

● Data Link table of PC#1

- A total of 636 words (S to S+635 words) comprising system information (24 words), Area to send to computer (512 words) and Area to send to all nodes (100 words) are sent to the computer.
- The uppermost 100 words (T+436 to T+535 words) of the Area to send to computer of PC#2 are received at the Area to send to all nodes (S+636 to S+735 words) of the self node number (#1) as dummy words.
- The 100 words (T+536 to T+635 words) of the Area to send to all nodes of PC#2 are received at the Area to send to all nodes (S+736 to +835 words) of node number (#2).

● Data Link table of PC#2

- A total of 636 words (T to T+635 words) comprising system information (24 words), Area to send to computer (512 words) and Area to send to all nodes (100 words) are sent to the computer.
- The 100 words (S+536 to S+635 words) of the Area to send to all nodes of PC#1 are received at the Area to receive from all nodes (T+636 to T+735 words) of the self node number (#2).

● Data Link table of PC#32

The system information (24 words) from PC#1 and PC#2, Area to send to computer (512 words) and Area to send to all nodes (100 words) are each received in node number order.

Appendix 3
List of Operation Execution Times

This appendix describes the operation execution times for each of the function blocks.

How to Calculate the Load Rate

Calculate the load rate based on the following formula. This equation merely serves as a guideline, and the load rate may differ from the actually measured load rate.

When all operation cycles are the same

Formula: Load rate ≅ sum (ms) of operation execution time of each function block ÷ operation cycle (ms) x 100 + fixed load rate (%)

Note 1 The fixed load rates are as follows:

Operation cycle	Fixed load rate
0.1 s	10%
0.2 s	5%
0.5 s	2%
1 s	1%
2 s	0%

Note 2 The resolution of load rate measurement is 10ms (values lower than 10ms are discarded). The resolutions of the readout values are as follows for each operation cycle.

Operation cycle	Readout resolution
0.1 s	10%
0.2 s	5%
0.5 s	2%
1 s	1%
2 s	1%

After calculating the total (ms) of "each operation execution time + sequence command execution time", discard values lower than 10 ms and take the resulting value to be the "sum (ms) of operation execution time of each function block" in the above equation.

When mixed operation cycles are used

After calculating the load rates of each operation cycle by the above equation, add the load rates of each operation cycle to correct the operation cycles.

When the load rate of the shortest operation cycle is taken to be β%, add the following values to the load rates of each operation cycle.

Shortest operation cycle	Added value				
	0.1 s	0.2 s	0.5 s	1 s	2 s
At 0.1 s	0%	0.5 x β%	Load rate after 0.2 x β% + 0.2 s correction x 0.4	Load rate after 0.1 x β % + 0.2 s correction x load rate after 0.2 + 0.5 s correction x 0.5	Load rate after 0% + 0.2 s correction x load rate after 0.1 + 0.5 s correction x load rate after 0.25 x 1 s correction x 0.5
At 0.2 s	—	0%	0.4 x β%	Load rate after 0.2 x β % + 0.5 s correction x 0.5	Load rate after 0.1% + β% + 0.5 s correction x load rate after 0.25 + 1 s correction x load rate after 1 s correction x 0.5
At 0.5 s	—	—	0%	0.5 x β%	Load rate after 0.25 x β% + 1 s correction x 0.5
At 1 s	—	—	—	0%	0.5 x β%

List of Operation Execution Times for Function Blocks

Block model	Block name	Operation execution time	Remarks
000	System Common	1.05	The load rate increases by 0.40% at an operation cycle of 100 ms.
001	2-position ON/FF	0.74	
002	3-position ON/OFF	0.77	
011	Basic PID	1.61	
012	Advanced PID	1.84	
013	Blended PID	1.79	The operation execution time of this function block increased by 0.16 ms when the Loop Controller Unit was upgraded from version 2.00 to 2.50.
014	Batch Flowrate Capture	1.05	The operation execution time of this function block increased by 0.13 ms when the Loop Controller Unit was upgraded from version 1.50 to 2.00.
016	Fuzzy Logic	11.10	
031	Indication and Setting	0.71	The operation execution time of this function block increased by 0.12 ms when the Loop Controller Unit was upgraded from version 1.50 to 2.00.
032	Indication and Operation	0.86	The operation execution time of this function block increased by 0.22 ms when the Loop Controller Unit was upgraded from version 1.50 to 2.00.
033	Ratio Setting	0.80	The operation execution time of this function block increased by 0.19 ms when the Loop Controller Unit was upgraded from version 1.50 to 2.00.
034	Indicator	0.58	The operation execution time of this function block increased by 0.15 ms when the Loop Controller Unit was upgraded from version 1.50 to 2.00.
045	ES100X Controller Terminal	2.00	
110	4-point Warning Indicator	0.58	
111	High/Low Alarm	0.39	
112	Deviation Alarm	0.49	
113	Rate-of-change Operation and Alarm	0.49	
115	High/Low Limit	0.40	
116	Deviation Limit	0.50	
118	Analog Signal Hold	0.42	
121	Addition or Subtraction	0.71	
122	Multiplication	0.55	
123	Division	0.53	
126	Arithmetic Operation	3.19 + function processing time	The function processing time is calculated by multiplying the number of functions times the execution times given in the following table for each function.
127	Range Conversion	2.27	
131	Square Root	0.46	
132	Absolute Value	0.40	
133	Non-linear Gain (Dead Band)	0.45	
134	Low-end Cutout	0.46	
135	Segment Linearizer	0.53	

Function	Ttime (ms)
ABS(x)	0.01
ACOS(x)	0.33
ASIN(x)	0.32
ATAN(x)	0.24
COS(x)	0.17
SIN(x)	0.16
TAN(x)	0.21
EXP(x)	0.27
LN(x)	0.23
LOG(x)	0.25
P10(x)	0.52
SQRT(x)	0.04

Block model	Block name	Operation execution time	Remarks
136	Temperature and Pressure Correction	0.74	
141	First-order Lag	0.46	
143	Rate-of-change Limit	0.45	
145	Moving Average	0.55	
147	Lead/Delay	0.50	
148	Dead Time	0.57	
149	Dead Time Compensation	0.56	
150	Accumulator for instantaneous value input	0.59	
151	CPU Unit Running Time Accumulator	0.30	
153	Time Sequence Data Statistics	15.48	
155	Ramp Program	0.62	In versions of Loop Control Unit Ver.1.20 and ealier, the operation execution cycle of this function block was 0.34 ms. This cycle was increased by 0.28 ms in Ver.1.50.
156	Segment Program	0.35	
157	Segment Program 2	0.60	
161	Rank Selector	1.62	
162	Input Selector	1.18	
163	3-input Selector	1.42	
164	3-output Selector	0.62	
165	Constant Selectoor	0.32	
166	Constant Generator	0.28	
167	Ramped Switch	0.69	
171	Constant ITEM Setting	3.65	
172	Variable ITEM Setting	4.54	
174	Batch Data Collector	1.23	
182	Accumulated Value Input Adder	1.20	
183	Accumulated Value Analog Multiplier	1.04	
184	Accumulator for accumulated value input	0.74	
185	Contact input/Accumulated value output	0.46	
186	Accumulated Value Input/Contact output	0.45	
192	Analog/Pulse Width Converter	0.42	The load rate increases by 0.28% at an operation cycle of 100 ms.
201	Contact Distributor	1.90	
202	Constant Comparator	1.40	The operation execution time of this function block increased by 0.20 ms when the Loop Controller Unit was upgraded from version 1.50 to 2.00.
203	Variable Comparator	2.32	The operation execution time of this function block increased by 0.22 ms when the Loop Controller Unit was upgraded from version 1.50 to 2.00.
205	Timer	0.30	
206	ON/OFF Timer	0.29	
207	Clock Pulse	0.29	
208	Counter	0.29	
209	Internal switch	0.27	
210	Level Check	1.14	
221	ON/OFF Valve Manipulator	0.29	The load rate increases by 0.27% at an operation cycle of 100 ms.
222	Motor Manipulator	0.38	The load rate increases by 0.28% at an operation cycle of 100 ms.
223	Reversible Motor Manipulator	0.41	The load rate increases by 0.29% at an operation cycle of 100 ms.

Block model	Block name	Operation execution time	Remarks
224	Motor Opening Manipulator	0.53	The load rate increases by 0.29% at an operation cycle of 100 ms.
301	Step Ladder Program	3.39	• The sequence command execution times shown in the following table must be added. • The load rate increases by 0.30% at an operation cycle of 100 ms.
401	DO to Computer	15.04	
402	AO to Computer	2.12	
403	1-Block Send Terminal to Computer	4.35	
404	4-Block Send Terminal to Computer	8.41	
407	DO Terminal to All Nodes	4.17	
408	AO Terminal to All Nodes	0.55	
409	DO Terminal Settings from Computer	0.33	
410	AO Terminal Settings from Computer	0.30	
414	DI Terminal from All Nodes	0.33	
415	AI Terminal from All Nodes	0.30	
451	DI Terminal from CPU Unit	0.42	
452	DO Terminal to CPU Unit	0.44	
453	AI Terminal from CPU Unit	0.46	
454	AO Terminal from CPU Unit	1.35	
455	DI Terminal from Extended CPU Unit	14.23	
456	DO Terminal to Extended CPU Unit	7.81	
457	AI Terminal from Extended CPU Unit	16.22	
458	AO Terminal from Extended CPU Unit	9.53	
461	Receive All Blocks	See table 1 below.	
462	Send All Blocks	See table 1 below.	
501	DI 8-point Terminal	0.31	
502	DI 16-point Terminal	0.31	
503	DI 32-point Terminal	0.33	
504	DI 64-point Terminal	0.35	
511	DO 5-point Terminal	0.31	
512	DO 8-point Terminal	0.31	
513	DO 12-point Terminal	0.31	
514	DO 16-point Terminal	0.33	
515	DO 32-point Terminal	0.33	
516	DO 64-point Terminal	0.35	
518	DI 16-point/DO 16-point Terminal	0.32	
525	DI 96-point Terminal	0.37	
537	DO 96-point Terminal	0.39	
544	DI 48-point/DO 48-point Terminal	0.35	
551	AI 8-point Terminal (AD003)	0.51	
552	AO 8-point Terminal (DA003/4)	1.44	
553	AI 2-point/AO 2-point Terminal (MAD01)	0.48	
561	AI 4-point Terminal (PTS01/02/03, PDC01, PTW01)	0.38	
562	PI 4-point Terminal (PPS01)	0.54	
563	AO 4-point Terminal (PMV01)	0.63	

Block model	Block name	Operation execution time	Remarks
564	AI 8-point Terminal (PTR01/02)	0.44	
583	AI 4-point/AO 4-point Terminal (MAD44)	0.71	
584	AI 8-point Terminal (AD081)	0.51	
585	AO 8-point Terminal (DA08V/C)	1.48	
586	AI 4-point Terminal (AD041)	0.40	
587	AO 4-point Terminal (DA041)	0.83	
588	Ai4 Terminal (DRT1-AD04)	0.45	
589	Ao2 Terminal (DRT1-DA02)	0.74	

Table: Execution Times for Receive All Blocks and Send All Blocks

The execution times for Receive All Blocks (Block Mode 462) and Send All Blocks (Block Model 461) depend on the function blocks that are being sent or received. The time for each block is given in teh following table. Add the time for each block being send or received to find the total time for Receive All Blocks or Send All Blocks

Note The following times for Receive All Blocks assume that the Forced Interrupt Switch (ITEM 020) is ON and that all ITEM data is received from the CPU Unit each cycle, i.e., the maximum times.

Unit: ms

Block model	Block name	Time for Receive All Blocks (Block Model 461)	Time for Send All Blocks (Block Model 462)
001	2-position ON/FF	0.64	0.02
002	3-position ON/OFF	0.65	0.02
011	Basic PID	4.74	0.16
012	Advanced PID	8.96	0.15
013	Blended PID	4.50	0.14
016	Fuzzy Logic	11.29	0.12
014	Batch Flowrate Capture	0.43	0.15
031	Indication and Setting	0.36	0.11
032	Indication and Operation	0.40	0.12
033	Ratio Setting	0.37	0.12
034	Indicator	0.32	0.12
045	ES100X Controller Terminal	2.61	0.14
110	4-point Warning Indicator	0.32	0.13
111	High/Low Alarm	0.26	0.11
112	Deviation Alarm	0.29	0.10
113	Rate-of-change Operation and Alarm	0.31	0.12
115	High/Low Limit	0.26	0.11
116	Deviation Limit	0.28	0.09
118	Analog Signal Hold	0.24	0.09
121	Addition or Subtraction	0.35	0.10
122	Multiplication	0.32	0.10
123	Division	0.30	0.10
126	Arithmetic Operation	2.33	0.12
127	Range Conversion	0.07	0.15
131	Square Root	0.25	0.09
132	Absolute Value	0.07	0.08
133	Non-linear Gain (Dead Band)	0.28	0.09
134	Low-end Cutout	0.24	0.09
135	Segment Linearizer	0.07	0.08

Unit: ms

Block model	Block name	Time for Receive All Blocks (Block Model 461)	Time for Send All Blocks (Block Model 462)
136	Temperature and Pressure Correction	0.32	0.10
141	First-order Lag	0.24	0.09
143	Rate-of-change Limit	0.29	0.11
145	Moving Average	0.31	0.11
147	Lead/Delay	0.26	0.11
148	Dead Time	0.27	0.10
149	Dead Time Compensation	0.28	0.10
150	Accumulator for instantaneous value input	0.28	0.10
151	CPU Unit Running Time Accumulator	0.23	0.09
153	Time Sequence Data Statistics	0.28	0.11
155	Ramp Program	1.04	0.11
156	Segment Program	0.88	0.10
157	Segment Program 2	1.54	0.12
161	Rank Selector	0.07	0.10
162	Input Selector	0.09	0.10
163	3-input Selector	0.08	0.10
164	3-output Selector	0.08	0.10
165	Constant Selector	0.32	0.11
166	Constant Generator	0.30	0.10
167	Ramped Switch	0.28	0.12
171	Constant ITEM Setting	0.44	0.11
172	Variable ITEM Setting	0.09	0.11
174	Batch Data Collector	0.09	0.09
182	Accumulated Value Input Adder	0.33	0.10

Unit: ms

Block model	Block name	Time for Receive All Blocks (Block Model 461)	Time for Send All Blocks (Block Model 462)
183	Accumulated Value Analog Multiplier	0.31	0.10
184	Accumulator for accumulated value input	0.28	0.11
185	Contact input/Accumulated value output	0.07	0.09
186	Accumulated Value Input/Contact output	0.07	0.11
192	Analog/Pulse Width Converter	0.25	0.09
202	Constant Comparator	0.47	0.14
203	Variable Comparator	0.08	0.13
205	Timer	1.23	0.09
206	ON/OFF Timer	1.16	0.09
207	Clock Pulse	0.43	0.09
208	Counter	0.24	0.11
209	Internal Switch	0.27	0.27
210	Level Check	0.37	0.15
221	ON/OFF Valve Manipulator	0.27	0.10
222	Motor Manipulator	0.33	0.13
223	Reversible Motor Manipulator	0.35	0.14
224	Motor Opening Manipulator	0.33	0.12

Sequence Command Execution Times

When the Step Ladder Program (Block Model 301) is used, add the following command execution times to the operation execution time (3.39 ms) of the sequential control program itself.

Command code	Command	Execution time (ms)	Remarks
00	END	0.011	
01	LOAD	0.137	
02	LOAD NOT	0.137	
03	AND	0.137	
04	AND NOT	0.137	
05	OR	0.137	
06	OR NOT	0.137	
07	AND LOAD	0.015	
08	OR LOAD	0.015	
11	OUT	0.104	
12	OUT NOT	0.104	
13	SET	0.104	
14	RESET	0.104	
15	DU	1.060	
16	DD	1.060	
21	STEP	0.011	
22	BLOCK SET	0.990	
23	BLOCK RESET	1.827	
25	JUMP	0.914	
27	SETUP TIMER	0.014	The load rate increases by 0.01% at an operation cycle of 100 ms.
28	ALARM TIMER	0.014	The load rate increases by 0.01% at an operation cycle of 100 ms.
30	NOP	0.011	

Index

A

AI Terminal from CPU Unit, 31
AI Terminal from Expanded CPU Unit, 31
AI x-point Terminal, 30
AI x-point/AO x-point Terminal, 30
AO Terminal to CPU Unit, 31
AO Terminal from Expanded CPU Unit, 31
AO x-point Terminal, 30

B

battery error, 116, 193
battery, 61, 202
block address, 71
Block Model, 71

C

cascade control, 162
cold start, 87
CPU Terminal, 31, 33, 118
CX-Process Monitor, 34, 45, 126
CX-Process Tool, 34, 43, 142

D

data update check code, 124
dead time compensation control, 171
default data, 77
DI Terminal from CPU Unit, 34
DI Terminal from Expanded CPU Unit, 34
DI x-point Terminal, 33
DI x-point/DO x-point Terminal, 34
DO Terminal from CPU Unit, 34
DO Terminal from Expanded CPU Unit, 34
DO x-point Terminal, 33
Data Memory (D) for Node Terminals, 122, 223

E

error code, 193, 194
error log, 188, 190, 195
execution error code, 116, 196
Expanded CPU Unit Terminal, 31, 33, 118
external I/O refresh cycle, 28, 106

F

feedforward control, 165
FINS Gateway, 43, 45
FINS command, 174
Field Terminals, 30
Flash Memory, 19, 62, 85, 86, 200
function block data sheet, 70
function block database error, 116, 194
function block, 20, 70

H-I

hot start, 87
ITEM, 70, 74

L

load rate, 28, 100
logic sequence, 213
LCU number, 122, 221

M-N

MV error contact input ON, 116
noninteracting control, 167
Node Terminals, 13, 217

O

operation cycle, 93, 96
Operation Cycle Automatic Switching Generation flag, 106
operation data, 77
operation execution time, 100, 231
order of operation, 98

P-T

PV error input ON, 116
RS-232C port, 60
SCADA Software, 12, 130
Step Ladder Program, 205
step sequence, 213
system information, 195
tag ITEM, 35
tag number, 35, 126

Revision History

A manual revision code appears as a suffix to the catalog number on the front cover of the manual.

Cat. No.	W374-E1-3

Revision code

The following table outlines the changes made to the manual during each revision. Page numbers refer to the previous version.

Revision code	Data	Revised content
1	March 2000	Original production
2	November 2000	Addition of the following function blocks and corrections made to errors. • ES100X Controller Terminal (Block Model 045) • 4-point Warning Indicator (Block Model 110) • Arithmetic Operation (Block Model 126) • Time Sequence Data Statistics (Block Model 153) • Receive All Blocks (Block Model 461) • Send All Blocks (Block Model 462) Addition of the following functions and corrections made to errors • DIP switch setting added to enable battery-free operation using flash memory. • RX-232C port application added for connection to ES100X Controller.
3	August 2001	Addition of the following function blocks and corrections made to errors. • Fuzzy Logic (Block Model 016) • Range Conversion (Block Model 127) • Ramped Switch (Block Model 167) • Level Check (Block Model 210) • AI4 Terminal (DRT1-AD04) (Block Model 588) • AO2Terminal (DRT1-DA02) (Block Model 589) Addition of the following function block ITEMS and corrections made to errors • Block Registration Flag (ITEM 039) and Tool Version (ITEM 110) in System Common (Block Model 000). • Warning Limit (ITEM 012) in Basic PID (Block Model 011, Advanced PID (Block Model 020), 2-Position ON/OFF (Block Model 001), 3-Position ON/OFF (Block Model 002), Indication and Setting (Block Model 031), Indication and Operation (Block Model 032), Ratio Setting (Block Model 033), Indicator (Block Model 034), and 4-Point Warning Indicator (Block Model 110). • SP Rate-of-change Limit Time Unit (ITEM 030) in Advanced PID (Block Model 012). • Local SP Setting, Upper 4 Digits (ITEM 024), Remote SP Setting, Upper 4 Digits (ITEM 028), Current SP Value, Upper 4 Digits (ITEM 030), Preset Value, Upper 4 Digits (ITEM 061), and Batch Accumulated Value, Upper 4 Digits (ITEM 065) in Batch Flowrate (Block Model 014). • Time Unit (ITEM 013) in Rate-of-change Limit (Block Model 143). • Reference Input Disable Switch (ITEM 020) in Segment Program 2 (Block Model 157). • Output Type (ITEM 006) in Contact Distributor (Block Model 201). • Range settings in AI Terminal from CPU Unit (Block Model 453), AO Terminal to CPU Unit (Block Model 454), Ai4 Terminal (Block Model 561), Pi4 Terminal (Block Model 562), and Ai8 Terminal (Block Model 564). • Receive Disable Switch (ITEM 225) in Expanded DI Terminal from CPU Unit (Block Model 455) and Expanded AI Terminal from CPU Unit (Block Model 457) and Send Disable Switch (ITEM 225) in Expanded DO Terminal from CPU Unit (Block Model 456) and Expanded AO Terminal from CPU Unit (Block Model 458).